SECTION FIVE

COBB COUNTY TRAFFIC SIGNAL SPECIFICATIONS

Cobb County Department of Transportation

Traffic Signal Specifications

Cobb County...Expect the Best!

July 2026

Table of Contents

Section 647 – Traffic Control Signal Installation 4
Section 687 – Signal Timing 41
Section 925 – Traffic Control Signal Equipment 42
Section 926 – Wireless Communications Equipment 94
Section 935 – Fiber Optic System 104
Section 936 – Closed Circuit Television 119
Section 937 – Detection Systems 131
Section 939 – Communications and Electronic Equipment 160
Section 942 – ITS General Requirements (CCTV) 182

GENERAL PROVISIONS FOR INSTALLATION OF TRAFFIC CONTROL EQUIPMENT

1.1 Purpose

The purpose of this specification is to set forth the requirements and terms for signal installations in Cobb County, Georgia. All traffic signal equipment shall conform to the Cobb County Department of Transportation (the Department) Traffic Signal Specifications. All signal installations shall conform to the Georgia Department of Transportation specifications unless otherwise noted in these specifications. Where differences occur, this specification shall take precedence.

NOTE: All general provisions contained within these specifications shall apply to all sections.

1.2 Equipment

For all County Department of Transportation (Operations) Countywide Unit Price contracts, Cobb County will supply the following items: traffic signal cabinet, controller, monitor, cabinet base, tech pads, vehicle signal heads with LEDs, pedestrian signal heads with countdown inserts, pedestrian push buttons, pedestrian signs and mounts, fiber optic cable, strain poles, mast arms, pull boxes, video or radar detectors and all accessories, loop detectors, load switches and flashers. The contractor shall supply all other items, unless otherwise specified in the signal plans. For Developer funded traffic signal installations, Georgia Department of Transportation projects or County Department of Transportation roadway projects, all traffic signal equipment shall be furnished by the signal contractor that is performing the installation.

NOTE: All signal installations and materials shall conform to the current Georgia Department of Transportation Specifications Edition, Cobb County DOT Traffic Signal Specifications and the Cobb County Master Contract Section 3. Where differences occur, the Cobb County Traffic Signal Specifications and the Cobb County Traffic Signal Installation Specifications shall take precedence.

1.3 Competency of Bidders

The Department may limit the amount of work awarded to any Contractor, based on the information furnished to the Department in the Prequalification process. The Department may also limit the aggregate amount of work awarded to any non-prequalified Contractor.

The Department may refuse any Contractor Proposals to bid on additional work if the Contractor is behind schedule on work he has with the Department, as determined from the Progress Schedule called for in the Specifications. This refusal will apply to all applications for Proposals, made in the name of an individual, firm, partnership, or corporation with which the delinquent Contractor is affiliated.

1.4 Contractor/Bidder

1.4.1 Contract Person

The bidder shall furnish the name and phone number(s) of a customer service representative that will serve as a liaison for Cobb County to address all equipment and installation problems. **It is the responsibility of this person to provide answers to all questions pertaining to the equipment and installation being provided**. If the contact person cannot answer a particular question, it is their responsibility to obtain an answer from an appropriate source. If equipment needs to be repaired or replaced, the contact person is responsible for making arrangements for returns and deliveries. All correspondence shall be through the contact person, unless otherwise agreed upon by Cobb County.

1.4.1 Alternate Contact

When the primary contact person will be unavailable for more than 24 hours (vacations, illness, etc.), Cobb County must be furnished with the name and phone number of an alternate contact given all responsibilities of the primary contact.

1.5 Subcontractor

Any individual, firm, corporation, or combination thereof to which the Contractor with the written consent of the Department sublets any part of the Contract. The Department reserves the right to reject a proposed traffic signal subcontractor based on past performance, to include work performed for the Department which was substandard or behind schedule.

Revised for Cobb County

Section 647 – Traffic Control Signal Installation

647.1 General Description

This section contains the requirements for installing traffic control signal equipment, submittal processes, testing, warranty, and Contractor's signal maintenance responsibilities. The Contractor shall install all equipment, poles, bases, wiring, and incidental materials required for a complete and functional traffic control signal installation according to this section.

Traffic control signal installations include traffic signals, Pedestrian Hybrid Beacons (PHB), Rectangular Rapid Flashing Beacons (RRFB), flashing beacons, and school speed zone flashing beacons.

The Department shall perform reviews and grant approval on projects constructed at intersections and any other location under the jurisdiction of the Department. For intersections and locations not under the jurisdiction of the Department, the local agency having jurisdiction shall perform reviews and grant approval.

All specified traffic control signal equipment shall be installed without modification. The Contractor shall install the traffic control signal equipment according to the contract.

For traffic control signal installations, no deviations in the design and operation of the traffic control signal are permitted without the written approval of the Engineer.

Table 1 provides a listing of roles, responsibilities and approval steps in the preconstruction and construction process.

Table 1 – Approval Authority for Traffic Control Signals Constructed at Locations Under the Jurisdiction of Cobb County DOT

Role or Department	Nature of Approval Authority	Reference
Project Design and Operations Change Approval (Preconstruction)		
Signal Design Engineer (SDE)	Review traffic control signal design or operation changes, if applicable	647.1
Product Materials Approval List (Preconstruction)		
Office of Traffic Operations (GDOT)	Maintain QPL 48, Traffic Control Signal & ITS Equipment	SOP 42
Project Traffic Control Signal Final Field Checks (Preconstruction)		
Office of Materials and Testing (for State Routes) or SDE	Review traffic control signal pole submittal	647.1.03.E.1
State Bridge and Structural Design Engineer (for State Routes) or SDE	Review Mast Arm Pole Chart, if applicable	647.1.03.E.4
SDE	Review the span wire sag calculations for new installations	647.3.06.K.2
Project Material Approval (Preconstruction)		
Construction Manager or designee (Contract/Project Inspector)	Prior to pole and mast arm order by the Contractor, review for final location of poles and final length of mast arms based on field adjustments	647.1.03.E.1. a through c

Table 1 – Approval Authority for Traffic Control Signals Constructed at Locations Under the Jurisdiction of Cobb County DOT		
Role or Department	**Nature of Approval Authority**	**Reference**
Project Material Approval (Preconstruction)		
SDE	Review equipment submittal, except for traffic control signal poles	647.1.03.B.1
SDE	Verify exact equipment submitted by the contractor is listed in the QPL	647.1.03.B.3
SDE	Issue letter regarding the acceptability or rejection of the material submitted	647.1.03.B.4
SDE	Written approval of product materials not listed on the QPL	647.1.03.C.1
SDE	Resubmittal of rejected materials	647.1.03.C.2
SDE	Written acceptance of the material submittal	647.1.03.C.3
Construction Manager or designee (Contract/Project Inspector)	Replace the defective state-supplied equipment, if applicable	647.2.03.A
Construction Manager or designee (Contract/Project Inspector)	Review and direct the disposal for removed or replaced traffic control signal equipment, including coordination with the Traffic Signal Shop	647.3.01.E
Project Construction Phase Approval		
(Local) Power Utility	Perform field inspection of power service	647.3.01.B.1.i
Construction Manager	Grant permission to begin work	647.3.01.D.1
Construction Manager or designee (Contract/Project Inspector)	Perform field inspection of traffic control signal installation process	647.3.03.B.4.a
Office of Materials and Testing (for State Routes) or SDE	Review and approve anchor bolts	647.3.06.E.1.g
Contract/Project Inspector	Perform foundation concrete test (cylinder strength)	647.3.06.E.1.e
Payment and Acceptance Approval (Construction)		
Construction Manager	Recommend payment only after the successful completion of the operational test period	647.3.03.B.4.b
Construction Manager	Issue written acceptance of project before Final Acceptance is granted	647.3.03.C

Table 1 – Approval Authority for Traffic Control Signals Constructed at Locations Under the Jurisdiction of Cobb County DOT		
Role or Department	**Nature of Approval Authority**	**Reference**
Payment and Acceptance Approval (Construction)		
Construction Manager	Contract/Project Inspector to provide letter to the Construction Manager showing the start, termination, suspension, or successful completion of the operational test.	647.3.03.C.1
Construction Manager or designee (Contract/Project Inspector)	Approve partial payment requests	647.5.01.B

647.1.01 Definitions, Acronyms, and Abbreviations

A. Definitions

Refer to Section 942.1 for a list of additional definitions and terminology used in this section.

1. **Activation:** a traffic control device becomes operational for the purposes of controlling traffic during the construction project.
2. **Authority Having Jurisdiction (AHJ):** refers to GDOT, counties, or local municipalities.
3. **Construction Manager:** representative of the Engineer from the Department.
4. **Controller Cabinet Assembly:** a controller cabinet assembly equipped with a controller unit and auxiliary equipment necessary to regulate a flow of motorized and non-motorized users at signalized intersection or meter the flow of traffic onto a full access-controlled road facility.
5. **Controller Unit:** that part of a controller assembly that can receive and analyze field inputs, reacting to those inputs per programmed timing parameters, and providing outputs to the proper signal indications. Refer to Section 925 for material specifications of the controller unit.
6. **Failure:** traffic control device or ancillary equipment element becoming unable to comply with the Project requirements and applicable standards described in the contract.
7. **Field Cabinet:** a cabinet used to house electronic devices for traffic control device installations, UPS, flashing beacon, or other auxiliary equipment as defined in the contract.
8. **Make Ready Work:** work required by utility companies to adjust the position of power and communication lines in advance of attaching traffic control signal or network infrastructure.
9. **Operational Test:** consists of field test performed by the Department (all sections), followed by a burn-in period of a minimum of 30 calendar days (all sections), a final inspection and acceptance. These tests verify completion according to the contract, full functionality of all systems and, if applicable, communication over the GDOT network.
10. **Pedestrian Hybrid Beacon (PHB):** an electrical device located primarily at mid-block locations to serve non-motorized users that is intentionally placed in a dark mode (no indications displayed) between periods of operation and, when operated, displays both steady and flashing traffic control signal indications (yellow and red) designed to control traffic.
11. **Power Disconnect:** Master switch to disconnect electrical power from the local utility to the traffic control signal.
12. **Power Service**: The point of electrical power provided by the local utility. Encompasses the power service drop and meter.

13. Not applicable.
14. **Rectangular Rapid Flashing Beacon (RRFB):** an electrical warning device located primarily at mid-block locations to serve non-motorized users that is intentionally placed in dark mode (no indications displayed) between periods of operation and, when operated, displays a flashing warning (yellow) indication when actuated by pedestrians.
15. **Repair Time:** the time it takes, exclusive of requirements for mobilization, travel time, and/or the coordination of any lane closures, to diagnose, repair, and re-establish full functionality and operations of the site(s).
16. **Response Time**: the time it takes the Contractor to mobilize repair technician(s) from the time they receive the problem notification from the Department and arrive at the site(s).
17. **Submittal:** documentation required by the contract that the Contractor must submit for the Department's review, acceptance, or approval. Submittals may include product cut-sheets, shop drawings, working drawings, material test reports, material certifications, Project progress schedules, and schedule updates.
18. **Traffic Control Signal Installation:** a complete installation with a controller assembly, detection systems and required accessories, including necessary cabling, wiring, detection systems, controller, and communications to comprise an operational traffic signal, PHB, or RRFB per the contract.
19. **Traffic Control Signal**: an electrical device that provides visual information for transportation users to manage the movements of motorized and non-motorized users, including traffic signal, PHB, and RRFB.
20. **Traffic Signal:** a power-operated traffic control device by which traffic is warned or directed to take a specific action, as defined in Part 4 the MUTCD.
21. **Uninterruptible Power Supply (UPS):** a power management device that serves a dual purpose of normalizing the flow of electricity from the power service and supplies backup power to the controller cabinet assembly when power is lost.

B. Acronyms and Abbreviations

The following acronyms and abbreviations are used throughout the traffic control signal specifications.

AASHTO	American Association of State Highway and Transportation Officials
ADA	Americans with Disabilities Act
ANSI	American National Standards Institute
API	Application Programming Interface
ASTM	American Society of Testing and Materials
ATMS	Advanced Traffic Management System
AWG	American Wire Gauge
AWW	A.W. Williams Inspection
CALTRANS	California Department of Transportation
CF	Configuration Change Log
CRC	Cyclic Redundancy Check
CSA	Canadian Standards Association
DHCP	Dynamic Host Configuration Protocol
DIN	Deutsche Industrie Norm
DNS	Domain Name System

DS	Detection System
EIA	Electronic Industries Association
FCC	Federal Communications Commission
FCS	Frame Check Sequence
FHSS	Frequency-Hopping Spread Spectrum
FHWA	Federal Highway Administration
FYA	Flashing Yellow Arrow
GDOT	Georgia Department of Transportation
GND	Ground Connection
GRS	Galvanized Rigid Steel
GSM	Global System for Mobile
HDPE	High-Density Polyethylene
IEC	International Electrotechnical Commission
IMSA	International Municipal Signal Association
IP	Internet Protocol
ITE	Institute of Transportation Engineers
ITS	Intelligent Transportation System
IVDS	Intersection Video Detection System
LCD	Liquid Crystal Display
LED	Light Emitting Diode
LOFO	Last On, First Off
MDS	Magnetometer Detection System
MOT	Maintenance of Traffic
MOV	Metal Oxide Varistors
MPEG	Moving Picture Experts Group
MUTCD	Manual on Uniform Traffic Control Devices
NEC	National Electrical Code
NEMA	National Electrical Manufacturers Association
NESC	National Electrical Safety Code
NPT	National Pipe Thread
OD/ID	Outer Diameter/Inner Diameter
PCA	Printed Circuit Assembly
PCB	Printed Circuit Board

PDF	Portable Document Format
PHB	Pedestrian Hybrid Beacon
PVC	Polyvinyl Chloride
QPL	Qualified Products List
RDS	Radar Detection System
RJ	Registered Jack
RMS	Root Mean Square
RRFB	Rectangular Rapid Flashing Beacon
TEES	Transportation Electrical Equipment Specifications (CalTrans)
UL	Underwriters Laboratories
UPS	Uninterruptible Power Supply
USB	Universal Serial Bus
UV	Ultraviolet Light
VAC	Voltage Alternating Current
WDT	Watchdog Timer
WVDS	Wireless Vehicle Detection System
XHHW	XPLE High Heat-Resistant Water-Resistant
XLPE	Cross-linked Polyethylene

647.1.02 Related References

A. Standard Specifications

Section 105—Control of Work

Section 106—Control of Materials

Section 107—Legal Regulations and Responsibility to the Public

Section 108—Prosecution and Progress

Section 150—Traffic Control

Section 500—Concrete Structures

Section 501—Steel Structures

Section 535—Painting Structures

Section 615—Jacking or Boring Pipe

Section 631—Dynamic Message Signs

Section 636—Highway Signs

Section 639—Strain Poles for Overhead Sign and Signal Assemblies

Section 645—Repair of Galvanized Coatings

Section 680—Highway Lighting

Section 682—Electrical Wire, Cable, and Conduit

Section 700—Grassing

Section 755—Electrical Work

Section 800—Coarse Aggregate

Section 801—Fine Aggregate

Section 832—Curing Agents

Section 833—Joint Fillers and Sealers

Section 850—Aluminum Alloy Metals

Section 852—Miscellaneous Steel Materials

Section 853—Reinforcement and Tensioning Steel

Section 854—Castings and Forgings

Section 861—Piling and Round Timber

Section 870—Paint

Section 886—Epoxy Resin Adhesives

Section 910—Sign Fabrication

Section 911—Sign Posts

Section 912—Sign Blanks and Panels

Section 913—Reflectorizing Materials

Section 915—Mast Arm Assemblies

Section 922—Electrical Wire and Cable

Section 923—Electrical Conduit

Section 924—Miscellaneous Electrical Materials

Section 925—Traffic Control Signal Equipment

Section 926 – Wireless Communications Equipment

Section 927 – Luminaires, LED

Section 935—Fiber Optic System

Section 936— Closed-Circuit Television

Section 937— Detection Systems

Section 939—Communications and Electronic Equipment

Section 942—ITS General Requirements (CCTV)

B. Referenced Documents

Standards and documents referenced throughout this Section are provided in Table 2.

Table 2 – Referenced Documents
AASHTO Roadside Design Guide, latest edition
Americans with Disabilities Act (ADA), Chapter 6 Curb Ramps and Pedestrian Crossings
IMSA Wire and Cable Specifications
Manual on Uniform Traffic Control Devices (MUTCD), latest edition
NFPA 70, National Electrical Code, latest edition
National Electrical Safety Code (NESC)
NEMA TS 1, Traffic Control Systems
NEMA TS 2, Traffic Controller Assemblies with NTCIP Requirements, latest edition
UL 1449, Standard for Surge Protective Devices

647.1.03 Submittals

A. General

1. All submittals shall consist of a single file in electronic PDF file format as specified herein.
2. All submittals shall be submitted to the Signal Design Engineer.
3. All incidental materials required for any pay item shall be contained in the submittal regardless of whether it was listed in the specifications.
4. Do not submit partial submittals for a pay item.
5. Items with long procurement times, such as poles, may be submitted separately to accommodate work schedule.
6. Do not procure or install materials or components proposed in the contract until material submittals or shop drawings are submitted for review and approved by the Department.
7. The Department will not be liable for any equipment or material purchased, work done, or delay incurred prior to the Department's approval of said equipment or material through the materials submittal data process.
8. The Department will approve or reject all submittals within 21 calendar days of receipt of a complete package, unless otherwise specified or indicated by the Department.
9. Do not interpret approval of the submittals as approval of any deviation unless such deviation is identified in writing in the submittal cover letter.
10. Any failure of the Department to discover or note any unsatisfactory material will not relieve the contractor of his responsibility for providing a complete operable Traffic Control device installation as called for under the terms of the contract.

B. Material Selection

1. Use only product materials that are on the Department's QPLs. These products have been evaluated by the Department and may be used without sampling or pre-testing. They include, but are not limited to:
   a. QPL-5 Electrical Conduit
   b. QPL-34 Work Zone Traffic Control Devices
   c. QPL-35 Drive Type Galvanized Steel Sign Posts
   d. QPL-46 Traffic Markings Producers
   e. QPL-48 Traffic Signal & ITS Equipment
   f. QPL-52 Overhead Signs Supports, Strain Poles, and Lighting Standards
   g. QPL-61 Reinforcement Steel Rolling Mills
   h. QPL-63 Ground Mounted Breakaway Sign Supports
   i. QPL-69 Flexible Delineator Post
   j. QPL-71 Glass Beads
   k. QPL-72 Guy Wire/Span Cable
   l. QPL-75 Inductive Loop Sealants
   m. QPL-76 Raised Pavement Markers and Channel Markers
   n. QPL-78 Traffic Signal Pull and Junction Boxes
   o. QPL-80 Highway Sign Manufacturers
2. Submit a letter to the Construction Manager stating which QPL items will be used. Submittal letter shall include QPL number and product description.
3. The Signal Design Engineer or designee will determine that the construction item is the same material identified on the appropriate QPL and will acknowledge receipt of these items in the project diary or as required by the construction manual. Support poles are verified by the Office of Bridge and Structures.
4. The Signal Design Engineer or designee will notify the Contractor of the acceptability of any accessories not covered by the QPL for use on the project.

C. Material Submittal Process

1. Written approval of product materials not listed on the QPL is required from the Signal Design Engineer or designee.
2. The Signal Design Engineer or designee may determine that submitted material is approved, in which case no further action is required. If rejected, the Contractor shall re-submit materials within 21 calendar days of notification of rejection. Resubmittal of subsequent materials for review shall be considered the start point of a new approval cycle as described.
3. The Signal Design Engineer or designee will advise, in writing, as to the acceptability of the material submitted.

D. Submittal Costs

1. No separate measurements or payment will be made for submittal costs.
2. All costs associated with reproduction of submittal material documents, samples, and mailing expenses shall be the responsibility of the contractor and are not subject to reimbursement by the Department.
3. All submittal material becomes the property of the Department.

E. Submittal Requirements

1. Steel Strain Pole, Concrete Strain Pole, or Steel Pole Certification

   a. Prior to ordering signal poles, locate utilities and stake the Right-of-Way for the purpose of adjusting pole locations, if necessary. Coordinate with the District office and local agencies to verify the location of any buried traffic/ITS communication lines. The Department is not a member of 811.

   b. Obtain approval from the Signal Design Engineer or designee for any design deviation from the contract.

   c. Final pole locations will be approved by the Construction Manager or designee. Determine the final length of mast arms based on field adjusted pole locations.

   d. Instruct the supplier or manufacturer of the strain poles or steel poles with mast arms to submit a certification, including mill certificates to the Office of Materials and Testing (for State routes) or the Signal Design Engineer (for local roads).

State Routes	Local Roads
Georgia Department of Transportation	Cobb County Department of Transportation
Office of Material Testing	1890 County Services Parkway
15 Kennedy Drive	Marietta GA, 30008
Forest Park, GA 30297	

   e. Instruct the supplier or manufacturer to include the following in the certification:

      i. A statement that the items were manufactured according to the specifications, including the specification section number

      ii. Project number

   f. Instruct the supplier or manufacturer to send the transmittal letter to the Department in PDF file format.

   g. Prepare shop drawings and related signal strain pole design calculations, following the vertical clearance requirements and span wire sag requirements.

   h. Show roadway and pole base elevations on the drawings. Account for any pole locations that deviate from the proposed plans.

   i. Show all dimensions and material designations of the designs on the drawings. See Section 501.1 for the shop drawing requirements for poles and anchor bolts.

   j. Submit all shop drawings and related signal strain pole design calculations to the Signal Design Engineer. The pole submittal information will be forwarded to the State Bridge and Structural Design Engineer for review and approval, if required.

   k. Provide bending moment at yield to determine the foundation size according to the signal strain pole foundation drawings. Obtain written approval prior to pole fabrication and installation.

   l. Upon acceptance of the pole certification, provide one copy of the design calculations and shop drawings to the agency responsible for maintaining the traffic control signal installation.

2. Traffic Control Signal Item Certification

   a. Submit material catalog product numbers and descriptions to the Department. Submit two hard copies and in PDF file format.

   b. Reference the P.I. number and QPL number for the following traffic control signal items:

      i. Signal faces (vehicular and pedestrian)

      ii. LED Signal Modules

      iii. Mounting hardware

      iv. Controller units

v. Controller Cabinet assemblies

vi. UPS

vii. Detection System

viii. Monitors

ix. Cable

x. Load Switches

xi. Blank-out signs

xii. Lane use signals

xiii. Preformed cabinet bases

xiv. Other related signal equipment (including conduit, pull boxes, grounding electrodes, enforcement indications, etc.)

3. Test Results Submittals

a. Submit applicable quality control testing from the manufacturers for the following items:

i. Controller unit

ii. Controller cabinet assembly

iii. Conflict monitor testing

iv. Detection system testing

v. Signal cable and inductance loop wire

vi. Other operational testing required by the Department.

b. Provide a copy of the applicable test result submittals to the maintaining agency, if different than the Department.

c. Refer to Section 647.3 for details on testing requirements.

4. Mast Arm Pole Charts

a. For locations with mast arm pole installations, submit Mast Arm Pole Chart for review and approval by the State Bridge and Structural Design Engineer or Signal Design Engineer as required per contract. The Mast Arm Pole Chart shall be a drawing formatted on an 11 in. x 17 in. (279 mm x 432mm) ANSI B sheet showing the following in both plan and cross-section views:

i. Curb lines

ii. Location of mart arm pole based on utility information and field location verified by Contractor. (final location of mast arm pole shall meet the criteria for setback from the road as specified in the AASHTO Roadside Design Guide and in the Standard Detail Drawings.)

iii. Distance labeling from both adjacent curbs to mast arm pole.

iv. Distance labeling along mast arm from pole to curb and from curb to each proposed traffic signal face

v. Directional arrow

vi. Street names

vii. Position of luminaire arms

b. Once the Master Arm Pole Chart is approved, use the distances measured to the proposed traffic signal face locations when ordering the mast arm to verify that the mast arm is fabricated with pre-drilled holes for traffic signal face wiring in the correct locations.

647.2 Materials

647.2.01 Delivery, Storage, and Handling

A. Include shipping and handling fees in the Contractor's base price.

B. Be responsible for equipment, components, and materials prior to installation and final acceptance.

C. Take precautions to protect materials from theft, vandalism/tampering, dents, scratches, dust, temperature, weather, cutting, paint, and other hazardous conditions prior to installation.

D. Replace damaged or lost material as required by the Department.

647.2.02 Tools and Equipment

A. Furnish equipment, tools, and superintendence for the completion of the work to be done in accordance with the contract.7

B. Verify equipment and tools mobilized for the work are in 100% working order and calibrated, if applicable, such as loop and ground testing equipment, prior to placing it in commission for the project.

C. Verify equipment and tool operators are trained and qualified before operating equipment on the project.

647.2.03 County-Supplied Equipment

A. Coordinate with the Construction Manager or designee to receive Traffic Control Signal Equipment from the Department.

B. Contractor shall acknowledge receipt of equipment, noting an itemized list of equipment and quantities, on Department 592 form.

C. Inspect the equipment for damage and verify that equipment will power on within 14 calendar days after receiving the equipment.

   1. Report to the Department, in writing, that the state-supplied equipment was received in good condition and operates when power is properly applied.

   2. Notify the Department in writing if the state-supplied equipment is defective. The Construction Manager or designee will coordinate the replacement of defective equipment.

   3. If no written dissent is received after 14 calendar days or if equipment is installed in the field, the Department shall consider this equipment to be satisfactory and accepted.

D. Supply new, like kind equipment to replace any state-supplied equipment that is lost or damaged while in Contractor's possession.

647.2.04 County-Supplied Equipment

See Section 925 for traffic control signal equipment specifications.

647.3 Construction Requirements

647.3.01 Construction Management Requirements

A. Contractor Superintendent

   1. Submit the name of the Traffic Control Device Contractor Superintendent and a summary of the individual's relevant experience and qualifications to the Department for approval.

   2. Do not change the Traffic Control Device Contractor Superintendent without the prior written approval of the Department.

   3. Traffic Control Device Contractor Superintendent or designee shall be present to supervise work performed by subcontractors.

   4. Provide a Qualified Electrician as defined in Section 755 when installing and connecting the power service to the traffic control equipment.

B. Utility Coordination

1. Utility Permit Application
   a. Establish the electrical power service for each traffic control device as specified in the contract.
   b. Furnish or install equipment and materials that shall become part of the regional utility facility.
   c. Coordinate such work with the utility representatives.
   d. Furnish and install additional power outlet strips in new and existing equipment racks if needed for the new equipment.
   e. Furnish equipment and materials and perform work in accordance with the contract and applicable utility agency standards and procedures.
   f. Meet standards required by utility companies as related to the equipment, materials, and installation associated with attachment to related power service feeds.
   g. Test the power utility service to confirm voltage levels and current capacity and the serviceability of any circuit connected to the traffic control device.
   h. Power utility representatives are not authorized to revoke, alter, or waive any requirements or design of materials or facilities provided under the specifications.
   i. The inspection of the Contractor's work by the utility providers or the failure to inspect the Contractor's work by the utility provider representatives shall not relieve the Contractor of any requirements of the specifications.
   j. Notify the Department and the utility providers' representatives of planned work.
2. Utility Maintenance
   a. The Construction Manager shall be responsible for establishing utility services and ongoing monthly costs related to utility services until Final Acceptance of the traffic control devices.
   b. Not applicable
3. Utility Adjustments
   a. Refer to the local utility for utility clearance requirements.
   b. Verify make ready work has been completed.

C. As Built Plans

1. Provide detailed as-built plans of the work performed.
2. Submit within 30 calendar days after completion of installation or as otherwise specified in the contract.
3. Show all changes and deviations from the original plans using electronic PDF file format, with markup shown in red text and lines.
4. Include all materials and installation work, along with all structural elements, assemblies and communications for each traffic control device in the as built plans.
5. Provide the following information regarding electrical service:
   a. Address of the service pole.
   b. Power services from the meter base, including all cables from the service point.
   c. The electric provider's name, the account number and the meter base information.
   d. Show routes and locations of the final cable installation.
6. Include any other device-specific details that are required in the individual specifications.

D. Traffic Control Signal Equipment Modification and Removal

1. The Department may continue to maintain project related traffic control devices after issuance of Notice to Proceed. The Construction Manager or designee will coordinate the Contractor assuming responsibilities for maintenance, operations, and response to existing traffic control devices at the time work begins.

2. Remove existing signal equipment that is not used in the final installation when the new signal equipment is operational.
3. Carefully remove equipment to minimize damage and retain it in its original form. This equipment may include:
   a. Strain poles, including the foundation down to 3 ft. (0.9 m) below ground level finished grade.
   b. Timber poles shall be completely removed, including the portion below ground level.
   c. Controller cabinet assembly, including contents, pole mounting hardware, cast concrete cabinet base, preformed cabinet base, and work pads, when applicable.
   d. Original traffic signal faces, including span wire support.
   e. CCTV cameras
   f. Vehicle and pedestrian detection systems
   g. Other equipment not retained in the final installation.
4. Verify that unused equipment is secured and disposed of in accordance with all regulations and the Department's specifications.
5. Replace traffic control signal equipment that the Construction Manager or designee determines has been damaged or destroyed during installation, modification, or removal of the traffic control signal, at no expense to the Department. Replace with new material.
6. If the Department finds that the existing material shown in the contract to be relocated is unsatisfactory, replace with new material. The costs shall be paid for at contract prices, if applicable, or as extra work.
7. Remove old traffic signal faces by the end of the day that the new signal equipment is placed in operation. Remove all other signal equipment within 7 calendar days after operations of the newly installed equipment.

E. Equipment Disposal

1. Return all removed or replaced traffic control signal equipment to the Cobb County Traffic Signal Shop unless otherwise noted in the contract or as directed by the Construction Manager or designee.
2. Provide an inventory list and arrange a mutually agreeable delivery time with the Construction Manager or designee 24 hours in advance.
3. Contractor shall be responsible for proper disposal of all materials not returned to the Signal Design Engineer.

647.3.02 Warranty and Maintenance Support Services

A. General

1. See Section 150.
2. If a traffic signal that is the responsibility of the Contractor is not functioning:
   a. Non-Emergency
      i. Commence work on this signal within 48 hours of the written notice from the Department. Failure to respond will result in a per calendar day charged against monies due or that may become due until the maintenance work is started. See Section 108.
      ii. In addition, the cost of labor and material will be charged by the Department if the Department takes corrective action using its own forces or local municipality forces.
      iii. The Contractor shall be responsible for all materials, equipment, and expertise necessary to correct signal malfunction or repair.
      iv. The Department or local municipality shall not be held responsible or liable for alleged damage to the signal or as a result of the signal malfunction due to problems that may occur after the Department or local municipality forces make repairs.
      v. If the Department determines that the signal malfunction or failure is an operational hazard, take corrective action within three hours of the first attempt of notification.

vi. Response shall be considered only when qualified personnel and equipment are provided.

vii. Failure to respond within three hours shall result in a non-refundable deduction of money of $1,000.00 with an additional charge of $500.00 per hour thereafter until qualified personnel and equipment arrive onsite and begin corrective action.

viii. In addition, the cost of labor and material will be charged by the Department if the Department takes corrective action using its own forces or local municipality forces.

ix. The Department shall not be held responsible or liable for alleged damage to the signal or as a result of the signal malfunction due to problems that may occur after Department or local municipality forces make emergency repairs.

x. The contractor shall be responsible for all materials and equipment necessary to correct signal malfunction or repair.

xi. Final Acceptance will not be given until payment for such work is received.

B. Maintenance Support Services

1. Provide maintenance support services that include the locating of underground signal wire, power connections, fiber, etc, in accordance with 811 guidelines and requirements.

2. Provide maintenance support services and assume responsibility of existing traffic control devices, the Department's communications network, and ancillary equipment damaged by the Contractor, including labor, equipment, and materials associated with the repair or replacement of said materials and equipment from the first day of field impact continually until project acceptance. Refer to Section 105 for requirements.

   a. Loop detectors that are removed or destroyed as part of construction, rehabilitation, or maintenance project shall be replaced in returned to full operation within the following time frames, based on the route prioritization rating provided in Table 3.

Table 3 – Loop Detector Replacement Requirements

State Route Prioritization Rating	Stop Bar Loop Detection	Setback Loop Detection (free)	Setback Loop Detection (coord)
CRITICAL/HIGH	5 Calendar days	5 Calendar days	28 Calendar days
MEDIUM	14 Calendar days	14 Calendar days	28 Calendar days
LOW	28 Calendar days	28 Calendar days	28 Calendar days

3. Provide maintenance support services during construction between construction initiation and project acceptance by the Department as follows:

   a. See Section 105 for requirements. The Department reserves the right to deduct the cost of maintenance activity from monies due or to become due the Contractor if the Contractor fails to remedy unsatisfactory maintenance within 48 hours after receipt of such notice.

   b. During the construction period, the Construction Manager or designee will send a written problem notification of the issue.

   c. Provide a technical support phone line and the ability to provide replacement parts/material for both warranty and non-warranty repair.

   d. Provide full technical support, including material and labor, and consultation to the Department or a user that is responsible for maintenance of the traffic control devices during the contract.

   e. Enter a precise description of repair work performed into the log book (supplied by the Department and located in the controller cabinet assembly).

   f. The Department will designate representatives and alternates as contact persons for the Contractor.

4. Provide maintenance support services following project acceptance during the remaining warranty period. The traffic control device equipment manufacturer(s) or the party designated by the manufacturer(s) shall be responsible for providing repairs or replacements for failed equipment as follows:
   a. During the warranty period, the Department's coordinator of maintenance or designee will send problem notification to the manufacturer(s) or the party designated by the manufacturer(s).
   b. The manufacturer or designated party shall respond to the Department, the Department's designee, or maintaining agency within one business day of receiving the problem notification.
   c. As requested by the Department, the Department's designee, or maintaining agency, perform remote diagnostic tests and provide a technical support phone line to assist with troubleshooting and repair activity.
   d. Furnish replacements for any non-critical part or equipment found to be defective during the warranty period at no cost to the Department, the Department's designee, or maintaining agency within 14 calendar days of notification by the Department.
   e. Provide firmware or software updates provided by the manufacturer associated with the system at no cost to the Department, the Department's designee, or maintaining agency during the warranty period.
   f. Updates provided by the manufacturer or the party designated by the manufacturer shall not degrade the original functionality of the product under warranty.

C. Warranty

1. Provide manufacturer's warranties on electrical, electronic, or mechanical equipment furnished, except state-supplied equipment.
2. Verify that warranties are consistent with those provided as customary trade and industry standard practices; or as otherwise specified in the contract.
3. Verify that warranties are continuous and state that they are subject to transfer.
4. Acceptance or approval of the work does not waive warranties where required by the specifications. Final Acceptance will not be granted until all warranties are received.
5. Repair and/or replace all equipment and material supplied under the contract that have been determined by the Department to not meet specifications.
6. The Department reserves the sole right to determine suitability or unsuitability of the supplied equipment and material. The Contractor shall bear the total cost of delivery and transportation related to the repair and replacement of equipment and material throughout the duration of the contract unless otherwise approved by the Department.
7. Transfer to the Department any warranties remaining on all items after Final Acceptance. Perform transfer at 12:01 AM of the day following acceptance.

647.3.03 Testing and Acceptance Requirements

A. Department Responsibilities

1. The Department will observe, provide inspection and testing oversight, review, accept, and reject inspections and operational tests.
2. During the Operational Test:
   a. The Department will notify the Contractor upon failure or malfunction of equipment.
   b. If the Contractor does not provide the services enumerated above under the contract responsibilities, the Department or its authorized agents may, in the interest of public safety, take emergency action.
   c. The Department will deduct costs from the monies due or to become due the Contractor under the contract as a result of these emergency actions.
   d. Such action by the Department will not void any guaranties or warranties or other obligations set forth in the contract.

B. Test Results Submittal

1. Submit the results of the testing of the following items to the Construction Manager.
2. A copy of the test result submittals shall be provided to the maintaining agency.
3. Submit test results of the following applicable items:
   a. Controller and Cabinet Testing from Manufacturer (Including conflict monitor)
   b. Inductance Loop Detector or other Detection System Testing
   c. IP Communications
   d. Audible Pedestrian Push buttons
   e. UPS
   f. Railroad Preemption
   g. Connected Vehicle Devices
   h. Other specialized equipment by other agency (e.g. emergency pre-emption, bus rapid transit, etc.)

C. Activation of Traffic Control Device

1. Traffic Control Signals may be activated prior to full completion to meet the traffic control needs of the contract.
2. Contractor shall pretest all furnished and installed hardware, wiring and connections prior to the Department's field tests.
3. The Department shall conduct a field test to verify that essential elements are installed and in working order prior to activation. The field test of partial installation shall follow the field test procedure as defined for the Operational Test.
4. An Operational Test shall not be performed until all equipment is installed.

D. Operational Test

1. An Operational Test is a multiple step procedure that shall be performed upon each traffic control device to verify working order of assembled components of the traffic control device and perform the desired functions for a specific installation is met per the contract.
2. Operational Tests shall be coordinated with the Construction Manager or designee.
3. Contractor shall pretest all furnished and installed hardware, wiring and connections prior to the Department's field tests.
4. The Operational Test shall consist of the following steps:
   a. Field test
      i. The Department shall conduct a field test to verify all traffic control device components are installed and the device is ready for full operation.
      ii. The field test shall demonstrate that all components:
         a) Hardware, cable, and connections furnished and installed by the Contractor operates correctly.
         b) All functions are in conformance with the contract.
         c) All circuits have continuity.
         d) Grounded according to this Section and Section 682.
         e) Unless otherwise directed by the Department, sidewalks and ramps shall be complete and accessible to the pedestrian detection system and pedestrian signal faces shall be operational to begin the burn-in period.
         f) Contractor shall promptly address any corrective list items identified during the field test.

g) The traffic control device shall not be activated, and the operational test shall not continue until the field test is accepted by the Department.

iii. Conflict Monitor Test for Traffic Signals

a) The conflict monitor field test only tests for proper detection and triggering of a conflict monitor in response to a displayed pattern.

b) Test the conflict monitor for each traffic signal.

c) Provide a law enforcement officer to provide traffic control during the conflict monitor test.

d) Conflicting Signal Test

1) Verify and record the allowed channel configurations.

2) Use stop time feature to hold phase and apply line voltage to each conflicting signal phase. Verify the conflict is detected and controller cabinet assembly is sent into flash mode.

3) Advance controller unit to next phase and apply line voltage to each conflicting phase.

e) Red Failure Test

1) Check Red Failure feature by removing and reinserting load switches in sequence.

2) Verify that all monitored channels indicate Red failure.

b. Burn-in Period

i. Demonstrate through burn-in of day-to-day full operations (all components installed and operational) of the traffic control device, defined in the contract, including functional/system performance requirements, electrical requirements, vehicle and pedestrian detection system requirements, data communication requirements, environmental requirements, documentation, and interface requirements with other components of the system are fully satisfied.

ii. Repair or replace system failure or failed device during any portion of the burn-in test without disrupting the system's operation. After repairing the equipment, the Department will determine proper function.

iii. All costs associated with the maintenance, repair, or replacement of the traffic control devices shall be the responsibility of the Contractor between the time the Contractor initiates work and traffic control device acceptance from the Department.

iv. The duration of the burn-in test will be maintained by the Department as follows:

a) The test period shall be a minimum of 30 calendar days, which may be consecutive or non-consecutive calendar days. The test duration may be extended based on the issues or failures experienced during the test.

b) The test period shall be paused in the event of a device or system failure and restarted upon correction of the failure(s).

c) Successful completion to be granted on the 30th day of the test period if no failures occur.

d) If any cabinet equipment failure occurs, final acceptance will be withheld until all the equipment is functioning properly for 30 consecutive calendar days after repair. Cabinet equipment shall include:

1) All components supplied with the cabinet shell as prescribed in Section 925.

2) The 2070 controller chassis or any modules within the controller.

3) All electronic components or wiring of the detection system

e) If equipment failure occurs during the 16th through 30th day, final acceptance will be withheld until all the equipment is functioning properly for 15 consecutive calendar days after repair. These items shall include only:

1) LED signal indications

2) Piezo driven pedestrian push buttons

3) 222L loop detector cards

4) 242L DC isolators

5) Load switches

6) Other input file project-specific detection technology modules.

f) If a specific piece of equipment has malfunctioned more than three times during the test period, replace the equipment with a new unit and continue the test period for an additional 30 calendar days.

g) The burn-in period shall not be measured separately for individual components or subsystems.

h) Burn-in test applies to all furnished and installed equipment.

i) If failed or malfunctioning of equipment furnished by others prevents the burn-in test from continuing, the Department will suspend the burn-in test and resume when all equipment failures are corrected.

j) At the conclusion of the burn-in period, a final field inspection shall be performed by the Department to verify all components are working in a satisfactory manner.

k) On projects with multiple traffic control devices, each device will be considered an individual device and burn-in tests shall be in independent of each other. Equipment failures at one location shall not impact the burn-in period of other locations.

v. Upon successful completion of the overall burn-in test, the traffic control device will be eligible for maintenance acceptance and final inspection and acceptance.

vi. The Department will determine burn-in period acceptance after satisfactory completion of the required burn-in period and based on a comprehensive field inspection of the complete system in accordance with the specifications.

vii. The system shall be maintained in accordance with Section 105.14 until final acceptance of the entire contract.

5. For Maintenance Acceptance, perform the following tasks:

a. Conduct final inspection and close-out after successfully completing the burn-in test and providing written notification of substantial completion and receiving Department approval.

b. The final inspection and close-out activities include:

i. Demonstrate the overall system is fully operational.

ii. Verify traffic control devices and components are in their correct final configuration.

iii. Verify submittals including test reports are submitted and approved by the Department.

iv. Verify final punch list items are completed.

v. Verify final cleanup requirements are completed and the field conditions are restored to their original condition.

vi. Obtain approval of final as-built plans.

vii. Deliver spare parts and materials.

viii. Complete all training services.

ix. Transfer all warranties to the Department.

6. Contractor shall maintain all work under the contract in accordance with the specifications during the burn-in period.

7. Contractor shall replace or repair the defective equipment during the burn-in period within 48 hours of notification by the Department, unless an emergency is declared.

8. Notification of substantial completion is defined by the Department as 100% of the infrastructure and traffic control devices and components have been furnished, installed, configured, integrated, and tested. When substantial completion has been met, as determined by the Department, the final inspection and close-out activities will be conducted.

E. Sequence

1. The Contractor shall notify the Construction Manager in writing that the installation and pretests of the furnished equipment is complete.
2. The Construction Manager or designee will perform the field test within 14 calendar days.
3. The Construction Manager or designee will provide an in-depth inspection and provide a written corrective list of items for the Contractor to correct. Within 14 calendar days of the notification, the Contractor shall correct the items noted.
4. When defects are resolved, the Construction Manager or designee will authorize the Contractor to activate the traffic control device and begin 30-day burn-in test.
5. If programming of the controller unit's firmware application is not a pay item for the contract, the Construction Manager or designee will coordinate programming the controller unit within 14 calendar days.
6. The Construction Manager or designee will send the Construction Manager a letter showing the start, termination, suspension, or successful completion of the operational test.
7. Request in writing the Department's approval to start the Traffic Control Device final inspection a minimum of 14 calendar days prior to the requested start date. The Department reserves the right to reschedule the start date if needed. The start date for the final inspection shall not be prior to the successful completion of the overall burn-in test.
8. Upon unsuccessful or incomplete Traffic Control Device final inspection, the Contractor will make the necessary corrections and conduct a new Traffic Control Device final inspection. Allow the Department up to 14 calendar days to conduct a final inspection.
9. The Department reserves the right to require, at no additional expense to the Department, the attendance of a qualified technical representative of the equipment or software manufacturers to attend a portion of a Traffic Control Device final inspection.

F. Final Inspection and Acceptance

1. The Contractor shall obtain written acceptance of the traffic control device installation from the Construction Manager or designee before Final Acceptance.

G. Communications Testing

1. Install basic network device configuration and test IP addressable equipment with the Department's network.
2. Provide notice of testing and submit test results to the Department.
3. Include notification and review periods, testing periods, and burn-in time in the overall progress (construction) schedule.

H. UPS Testing

1. Each UPS shall be given a minimum of five, 4-hour full battery cycle tests during the Operational Test period.
2. Tests to be administered manually, if necessary. The UPS log may be used to demonstrate proper operation during power outages of 4 hours to supplement the Operational test.

647.3.04 Construction Requirements

A. General

1. Traffic Control Signal installations shall meet the appropriate NESC requirements.
2. Comply with NEC requirements and Section 680.3 for grounding and bonding requirements for the power service.
3. The NEC will apply up to the power service termination within the traffic control device cabinet. Beyond that point, IMSA shall apply unless stated otherwise in this Section.
4. No splicing of cables or exposed wiring is permitted except for loop wires to loop lead-in cable.

5. Certain re-enterable conduit fittings permit splicing within them under NEC but shall be permitted solely at the discretion of the Department.
6. Provide wiring entry and exits that are made at the side or underneath components; no exposed top entry or exits are permitted. This requirement extends to enclosures, junction boxes, support arms, or any other externally exposed devices.
7. Route and secure wiring and cabling to avoid sharp edges and to avoid conflicts with other equipment or cabling.
8. Electrical work shall comply with applicable requirements of the local power utility.
9. Install equipment in new or existing rack space in accordance with the equipment manufacturer's recommendations, including mounting, interconnection wiring and electrical service.
10. Furnish and install mounting hardware and incidental materials, including fasteners and auxiliary supporting frames/brackets, as recommended by the manufacturer.
11. Furnish and install hardware, materials, wiring/cabling, configuration, and any other incidental items necessary for fully operational components and subsystems shown in the contract and Section 647, except when specifically identified as existing or as work to be performed by the Department.
12. Cables, Conduit, and Power Service
    a. Cables
        i. Furnish and install electrical cables for traffic control devices and the power service as required by the Contract.
        ii. Identify all conductors of all cables by color and number.
        iii. Identify the conductor function in as-built documentation included in the controller cabinet assembly documentation.
        iv. Cut unused conductors to a length that can reach any appropriate terminal.
        v. Bend back unused conductors over their outer jackets and individually tape them.
        vi. Install cabling inside new hollow metal or concrete support poles unless otherwise specified.
        vii. Neatly install and route cabling to minimize movement in the wind and chafing against the pole, device, or bracket.
        viii. Use weather heads on all nipple and exposed conduit openings.
        ix. Form a drip loop at the weather head and route cabling to minimize water entry into the cable connector. Use a 24 in. (600 mm) diameter drip loop where cables enter a weather head.
    b. Conduit
        i. Where devices are installed on existing wood poles, install power service cabling on the wood poles in rigid metal conduit risers.
        ii. Provide conduit with a minimum 1 in. (25 mm) diameter for power service cabling.
    c. Install meter base per Standard Details. Do not install the meter base on the cabinet.
    d. Safety switch
        i. For aerial power service attachments, install on signal poles at the top of the pole.
        ii. For underground power service, install a minimum of 15 feet high above the ground.
        iii. Safety switches shall not be installed on the cabinet.
13. Surge Protection Devices
    a. Protect all copper wiring and cabling entering the controller cabinet assembly by surge protection devices as specified in this section and Section 925 minimum requirements.
    b. Use a minimum No. 16 AWG grounding for each surge protection device, or larger if recommended by the surge protection device manufacturer.

c. Use insulated green wire and connect the ground wire directly to the ground buss bar.

d. Do not daisy chain the grounding wires of other devices, including other surge protection devices.

e. Label all surge protection devices with silk-screened lettering on the mounting panel.

f. Furnish and install all necessary transient surge protection device to protect detector and controller cabinet assembly equipment.

14. Grounding

a. Ground the controller cabinet assemblies, controller, poles, pull boxes, and conduit to reduce extraneous voltage to protect personnel or equipment.

b. Ground all span wire and down guy assemblies as shown on Standard Detail Drawings. Bond all span wire together and bond to ground at every pole.

c. Provide permanent and continuous grounding circuits with a current-carrying capacity high enough and an impedance low enough to limit the potential above the ground to a safe level.

d. Join the grounding electrodes and connect them to the grounding buss of the controller cabinet assembly with No. 6 AWG solid copper wire.

e. Use the shortest possible ground lead to the grounding source.

f. All components, including mounting hardware, shall be grounded and bonded per manufacturer's recommendations and NEC. Dress and route grounding wires separately from all other controller cabinet assembly wiring.

B. Installation of Grounding Conductors and Electrodes

1. Install grounding electrodes of size, length and material specified in Section 682.

2. Ground any pole-mounted equipment to the pole, except 336 controller cabinet assemblies and power service if pole mounted.

3. Install grounding electrodes adjacent to the traffic signal pole bases, preformed controller cabinet assembly bases, and in pull boxes to protect the grounding system.

4. Install a minimum of 3 grounding electrodes for each pole, pedestal and the controller cabinet assembly.

5. Grounding electrode stacking may be permitted in areas where ground conditions allow. The contractor shall coordinate with the Construction Manager or designee to have a Department representative observe stacked electrode installation.

6. Test electrodes according to Section 682. Report final test results.

7. Timber Poles

a. Use a minimum No. 6 AWG solid copper wire bonded to the grounding electrode and extending upward to a point perpendicular to the uppermost span.

b. Place wire staples no greater than 2 ft. (600 mm) apart to secure the ground wire to the pole.

c. Connect the span wire to the pole ground using copper split bolt connectors.

8. Cabinets

a. All cabinets

i. Connect the power company neutral, conduit ground, and grounds of equipment housed in the controller cabinet assembly to the buss-bar.

ii. Use a No. 6 AWG solid copper wire bonded between the buss and grounding electrode.

iii. Connect neutral conductors to the controller cabinet assembly buss-bar and ground them at each terminal point.

iv. Ground the controller cabinet assembly with a No. 6 AWG solid copper wire between the buss-bar to the grounding electrodes. Bends shall not exceed 4 in. (100 mm) radius.

b. 336 Cabinet Assembly

i. Provide a separate grounding electrode for pole mounted controller cabinet assemblies

ii. Do not use the pole ground as the cabinet assembly ground.

iii. Bond the pole grounding electrode to the pole mounted cabinet assembly's grounding electrode.

647.3.05 Installation of Traffic Control Devices

A. Controller Cabinet Assembly

1. Location

a. Locate in accordance with the contract.

b. If field conditions require the controller cabinet assembly location needs to be moved, the following criteria shall be met:

i. Controller cabinet assembly and technician work pads shall remain within the provided right-of-way.

ii. Locate controller cabinet assembly away from the edge of pavement or curb line to prevent damage from errant vehicles and protect maintenance personnel.

iii. Position the front panel door of the controller cabinet assembly away from the intersection, providing a view of the vehicular and pedestrian traffic signal faces for technicians.

iv. Comply with ADA sidewalk horizontal clearance requirements. This includes when controller cabinet assembly doors are open.

v. Avoid low lying and drainage areas likely to collect and hold surface water.

2. Installation

a. Install pole or base-mounted as indicated in the contract.

b. Verify controller cabinet assembly prefabricated base does not extend more than 9 in (225 mm) above final grade.

c. Seal base-mounted controller cabinet assemblies to their base using silicone-based sealer. Pliable sealant used shall not melt or run at temperatures as high as 212 ºF (100 ºC).

d. Mount ground-mounted cabinet to prefabricated base.

e. Install technician pad in front and rear of the controller cabinet assembly door, and if applicable in front of UPS auxiliary cabinet door. See Standard Detail Drawings for pad information.

f. Close all unused conduits in the controller base with an appropriately sized PVC cap. Do not permanently affix the conduit cap to the conduit.

3. Controller Cabinet Assembly Field Wiring

a. Install cabling and conductors the comply with NEC, UL and IMSA.

b. Install all cabling and conductors in a neat and secured fashion.

c. Cut signal conductor cables, inductance loop lead-in cable or other detection system cabling, and fiber optic drop cable to provide 10 ft. (3 m) of slack inside the controller cabinet assembly or pull box adjacent to the controller cabinet assembly. Neatly coil and organize wire in the bottom of the controller cabinet assembly.

d. Use at least No. 6 AWG wire for the conductors between service drop and AC+ and the AC- terminals.

e. Do not mount electrical meter to the controller cabinet assembly. Submit power pedestal or other method of providing location for mounting.

f. Label all field terminals and conductors to identify the specific field input.

g. Crimp terminal connections to conductors with a ratchet-type crimping tool that does not release until the crimping operation is completed.

h. Supply the controller cabinet assemblies with wiring diagrams, schematic drawings, pin assignment charts, and manuals for circuits and components. Store these documents in the controller cabinet assembly in a resealable, weathertight container.

i. Label individual conductors with a label maker using UV-protected labels and attach to each wire/cable and cover with transparent tape.

B. Auxiliary Controller Cabinet Assembly Equipment

1. Provide auxiliary controller cabinet assembly equipment or special purpose equipment with connecting harnesses, if necessary, or as shown in the contract.
2. Position the equipment in the controller cabinet assembly. Additional wiring may be necessary to install the equipment. Verify additional cabling meets appropriate specifications for the application, is enclosed in NEMA enclosure and is neatly secured.
3. Connect the auxiliary equipment to appropriate cable harness, pre-mounted rack, or socket.

C. Controller Unit

1. Identify the controller unit and other auxiliary equipment by model and revision numbers. These numbers shall agree with previously submitted and approved catalog submittals.
2. Assemble the controller unit, controller cabinet assembly, and auxiliary equipment to provide the operational phasing sequence specified in the contract.
3. Verify the controller unit functions as a unit with the controller cabinet assembly.
4. Verify controller unit and auxiliary equipment are provided AC power from receptacles marked for controller power.
5. Controller units shall be purchased with the Department's firmware preinstalled (current version). Firmware version shall be considered current as of the activation date.
6. Not applicable

D. Conflict Monitor

1. Mount conflict monitor in a rack with appropriate connectors to attach to the wiring harness.
2. Program the conflict monitor according to the signal operation indicated in the contract before activation of the traffic control device.
3. Provide conflict monitoring programming tools to the maintaining agency.
4. Configure and equip the conflict monitor to monitor all red signal indication.
5. Verify that the red output for unused or vacant load bays or output slots is jumpered to 120 VAC+.
6. Not Applicable

E. Signal Poles and Support

1. General Installation Requirements
   a. See Section 501 for signal pole materials certification and Section 925 for traffic control signal equipment.
   b. Refer to the contract for pole locations.
   c. Where necessary, adjust pole location to avoid utility conflicts. Relocations greater than 5 ft. (1.5 m) shall require approval from the Signal Design Engineer.

NOTE: Field drilled holes to any traffic signal pole or mast arm pole requires written approval from the Signal Design Engineer.

   d. Provide minimum clearance distances between the signal pole and the roadway as specified in the contract.
   e. Concrete Testing
      i. The Construction Manager shall make or create concrete cylinders for testing during the pour.

ii. If the concrete foundation fails to meet the requirements and is not accepted, the foundation shall be replaced upon notification of failure.

iii. If the concrete foundation fails to meet the requirements and is not accepted, the foundation shall be replaced upon notification of failure.

f. Verify that the pole foundations and pedestals with the anchor-type base meet the requirements of Section 500 and Section 639.

g. The Office of Materials and Testing will inspect the anchor bolts. If approved, the Office of Materials and Testing will display the inspector's hammer stamp mark on the top of the bolt.

h. Instruct the supplier to furnish a mill certificate that shows the alloy and physical properties of the steel used in fabricating the anchor bolts. The bolts may be subjected to a tensile and shear strength test.

i. Do not install or locate poles without the Department's approval.

j. Install pole foundations according to soil zones identified in the Standard Detail Drawings.

k. After installing poles and applying the load of the signal span, inspect them for plumb and for the horizontal position of the mast arm, when applicable.

l. Verify all threads of the nut are threaded onto the anchor bolt.

m. Power Service Attachment

i. Install a service bracket and insulator on one pole at each intersection to attach power service wire as specified in the contract.

ii. Install a disconnect box on the controller cabinet assembly pole at each intersection to attach power service. Underground services may utilize a ground mounted power service assembly.

n. Install poles to which controller cabinet assemblies are attached with mounting plates, bolts, nipples, and at least two (2) 2.5 in. (64 mm) threaded openings at the top and at least two (2) 2.0 in. (50 mm) at the bottom of the pole.

o. Galvanized Finish (Steel Poles)

i. Correct deficiencies by using the leveling nuts on the anchor bolts or by adjusting the mast arm.

ii. After the Department approves the pole installation, provide an acceptable method of protecting the area between the pole base and the top of the foundation to prevent the accumulation of debris.

iii. The Department will examine the pedestals and poles for damaged paint or galvanizing. Restore the finish coating where necessary.

iv. If the finish or galvanized steel materials is scratched, chipped, or damaged, the material will be rejected. The finish shall be replaced as specified under Section 645 with the Department's approval.

v. For poles or arms that need galvanization, thoroughly clean the steel poles and arms and touch up non-galvanized parts with i-d red or original-type primer.

p. Attach the fittings to the poles as specified by the manufacturer. The fittings may include:

i. Cast aluminum cap.

ii. Pole clamp hardware for span wire attachment

iii. Weatherhead with chase nipples and couplings

iv. Galvanized elbow with bushing installed by cutting the pole and welding in place around the entire circumference.

2. Concrete Strain Poles

a. Provide concrete strain poles that meet the requirements of Section 639 and Standard Detail drawings.

b. Verify pole hole orientations for pedestrian signal faces, pedestrian push button stations, luminaire arms, etc., with the Department prior to proceeding with traffic control signal installation. For poles at controller cabinet

assembly location, provide at least two (2) 2.5 in. (64 mm) openings at the top of pole and at least two (2) 2.0 in. (50 mm) threaded openings at the bottom.

c. Provide caissons or foundations that conform to the Construction Detail for Strain Pole and Mast Arm Pole Foundations in the Standard Detail Drawings.

d. Determine the required foundation size based on the manufacturer's specified bending moment at yield

e. for each pole.

f. Rake the poles during installation to provide a pole that is plumb once the load is applied.

g. Install concrete strain poles so that the angle of variance between the eye bolt on the pole and the span wire is less than 10 degrees.

h. Plug all unused holes. Use grout or threaded fittings. Match the finish of the pole.

3. Steel Strain Poles

a. Verify that anchor bolts, reinforcing bars, and grounding electrodes conform to Section 639 and Section 852 and are placed in the excavation.

b. Support the anchor bolts with a template to provide the proper bolt circle for the pedestal or pole to be installed.

c. Install anchor bolts without modifications. Refer to signal details for proper installation.

d. Wire the reinforcing bars together or to the anchor bolts.

e. Wire the conduits in the base to the reinforcing bars for support. Verify that they are accessible above and beyond the foundation's finish level.

f. Before pouring the foundation concrete, determine that the anchor bolt orientation is correct so that the tensile load is divided between at least two anchor bolts. Pour and vibrate the concrete with the Department present.

4. Mast Arms

a. Install mast arms that can accommodate signal face mounting hardware and that adhere to the manufacturer's recommended procedures and Section 925 and Section 915. Do not add holes.

b. Seal the openings in the mast arms to prevent pests from entering.

c. Align the mast arm to allow the traffic signal faces to hang plumb at the correct height without using extensions.

d. Verify all mast arms are galvanized unless indicated otherwise in the contract.

NOTE: Submit a *Mast Arm Pole Chart* to the County or the Office of Bridge and Structural Design for review and approval as described in Section 647.1.03.E.4.

e. Verify pole hole orientations for pedestrian signal faces, pedestrian push button stations, luminaire arms, etc., with the Department prior to proceeding with traffic control signal installation.

5. Pedestrian Pedestals

a. Install aluminum pedestal poles that adhere to Section 850 on breakaway aluminum bases that meet the requirements for breakaway construction. See Section 925 for breakaway base requirements. See the Standard Detail Drawings for Pole and Foundation Details.

b. Secure at least four anchor bolts in a concrete foundation as shown in the Construction Detail.

c. As an alternate to a concrete foundation, install a pedestal pole foundation anchor assembly (Section 925.2.21.E).

d. Install the foundation until the top of the base plate is level with the ground.

e. Slide bolt heads through the keyhole and under the base plate against the bolt head keepers with threads up.

f. Adhere to the manufacturer's instructions for installation.

g. Use a universal driving tool with the correct Kelly bar adaptor and bolts supplied with the tool.

h. Attach driving tool assembly to the foundation base plate using the bolts provided with each foundation. Be sure to align the tool soothe holes in the tool line up with the proper bolt circle on the foundation.

i. Stand the foundation, with the attached drive tool assembly, upright and attach the drive-tool-foundation to the Kelly bar.

j. Raise the Kelly bar until the foundation swings free of the ground.

k. Maneuver the Kelly bar until the point of the foundation is over the marked installation location.

l. Lower the Kelly bar until the point of the foundation is forced into the ground and the helix is flush with the ground surface.

m. Verify the shaft of the foundation is plumb by checking the shaft with a level on two sides that are at least 90 degrees from each other.

n. Recheck the shaft to be sure it is plumb when the foundation has penetrated 1 ft. (300 mm) into the ground.

o. When the base plate of the foundation is 1 in. (25 mm) to 2 in. (50 mm) above the ground line, remove driving tool.

p. Contain the wiring inside the pole or in approved hardware. Do not allow conduit outside the pole.

q. Position the pedestal pole plumb and high enough to clear the pedestrian's signal face as shown in the contract.

r. Verify that the bottom of the pedestrian signal housing including brackets at the preferred mounting height of 10 ft. (3 m) above the ground line. If conditions dictate, or specified in the contract, pedestrian signal housings may be mounted at a minimum of 7 ft. (2.1 m) above the ground line

s. If using a vehicle signal housing, verify pole is adequate to give traffic signal face a height of 12 ft. (3.6 m).

6. Timber Poles

a. Timber poles do not require the use of concrete for filling the cavity around the pole base.

b. Use timber poles that meet the requirements of Section 861 and Section 639.

c. Use Class II for all signal support poles. Use Class IV for aerial loop lead-in or communication cable if approved by the Department. Poles shall be inspected and include AWW stamp.

d. Use guy wires with guy timber poles as shown in the contract.

e. Use guy helper cables with separate guy wires when helper signal span cables are indicated in the contract.

NOTE: Never attach down guy wires to eye bolts. Attach down guy wires to angle guy attachment only and install insulating rods on all down guy installations as detailed on Standard Detail Drawings.

F. Power Disconnect

1. See Section 924 for material requirements.

2. Install a power disconnect box at each intersection as shown in the contract and Standard Detail Drawings.

G. Uninterruptable Power Supply (UPS)

1. General

a. Install UPS according to the contract.

b. Install UPS and battery bank in accordance with manufacturer's recommendations.

c. With the UPS submittal, provide calculations for determining the size of the inverter and batteries based on the power requirements for each location.

d. Verify that all auxiliary items are included in the power calculations.

e. Verify the submittal specifies the model number and the firmware revision that is being supplied.

2. Refer to the contract for the appropriate external cabinet mounting installation, if applicable.

a. Type A mounting shall be typically used for installing at locations with an existing traffic control device cabinet.

i. Total of 8 bolts per cabinet with 2 flat washers per bolt and 1 K-lock nut per bolt

ii. Cabinet mounting bolts shall be:

a) 18-8 Stainless Steel Hex Head (Fully Threaded)

b) 0.375 in. (10 mm) – 16 X 1 in. (25 mm)

iii. Washers shall be:

a) Designed for 0.375 in (10 mm) bolt

b) 18-8 Stainless Steel 1 in OD round flat type

c) K-lock washer shall be:

1) 18-8 Stainless Steel, Hex Nut Assembled with Free-Spinning Tooth Washer

2) 0.375 in. (10 mm) – #16 Screw size

iv. External cabinet couplings to the controller cabinet shall provide a conduit for power connections between the Model 332 Cabinet and the external cabinet.

a) The couplings shall consist of three parts and meet the following requirements:

3) 2 in. Nylon Insulated, Steel Chase Nipple

4) 2 in. Sealing, Steel Locknut

5) 2 in. Nylon Insulated, Steel Bushing

b) Provide external cabinet with all bolts, washers, nuts, and cabinet-cabinet coupler fittings for mounting the external cabinet to the Cabinet.

b. Type B mounting shall be typically used for locations with a new traffic controller cabinet and foundation.

i. The cabinet installation shall provide the external battery cabinet as a base mount cabinet on the same foundation as the Cabinet.

ii. Connections between the cabinets shall be through conduit in the cabinet base.

iii. The external cabinet shall be installed so that it is centered on the 30 in. (762 mm) left side of the cabinet.

iv. Bolt UPS cabinet to pre-fab base.

v. UPS cabinet opening shall be larger than the pre-fab base opening.

H. Traffic Signal Faces

1. General

a. Place traffic signal faces according to the contract. If a change to traffic signal placement is required, the revised location shall be approved by the Department in advance of installation and in compliance with the MUTCD.

b. Verify all traffic signal faces at an installation have the same appearance for the signal faces and the LED modules.

2. Vertical Clearance

a. Measure the vertical clearance from the pavement to the lowest part of the assembly, including brackets and backplates.

b. For traffic signal faces located above the roadway, provide vertical clearance that is a minimum of 17 ft. (5.2 m), 18 ft. (5.5m) preferred minimum, and a maximum of 19 ft. (5.8 m) above the roadway surface.

c. For traffic signal faces located on a pole, provide vertical clearance that is a minimum of 12 ft. (3.6 m) and a maximum of 19 ft. (5.8 m) above the sidewalk or pavement grade of the center of the highway, whichever grade is higher.

d. Adjust signal faces on the same approach to have the same vertical clearance.

3. Housing

a. Mount one aluminum reinforcing support plate in the top of the red (top) section of all three and four- section traffic signal face for the installation of mounting hardware.

b. Provide traffic signal faces that use stainless steel hardware and are weathertight.

c. Provide traffic signal faces that sealed for mounting in all possible configurations.

d. Provide traffic signal faces that have housing door that positively latches using two eyebolts and wing nuts.

e. Verify the signal door has hinge lugs molded on one side and two latch jaws are molded on the other side.

f. When constructing side by side signal sections, verify that both doors can open at the same time (butterfly).

g. When doors are open, verify that the door will remain attached to housing

h. Verify bottom section has drainage holes.

4. Wiring

a. Connect the signal cable to the wire in each traffic signal face to provide the correct signal indication when the cables are connected to the controller cabinet assembly back panels. Do not splice cables except in hand holes (splice together using pole splices) at the base of the poles or overhead in junction boxes.

b. Use wire nuts to make the connections to the LED signal modules lead-in.

c. Make all connections in the top section of the traffic signal face.

d. Do not splice cables.

e. Verify that the black signal conductor jacket is inserted into the traffic signal face a minimum of 6 in. (150 mm).

5. Optically Programmable Signal Faces

a. Install optically programmable (OP) traffic signal faces as shown in the contract, and as directed by the manufacturer.

b. Mount OP signal faces securely or tether them to limit movement.

c. Mask the OP lamp for directing visibility under the Department's supervision.

d. Tether traffic signal faces that have tunnel visors longer than 12 in. (300 mm).

e. Attach traffic signal faces to mast arms using rigid mounting brackets.

f. Adjust traffic signal faces on mast arms so that all red indications on the same mast arm are at the same elevation.

6. Not applicable

7. Lane Use Signal Faces

a. Install lane control signal faces for reversible lane systems as shown in the contract.

b. Center each signal over the lane or lanes under signal control.

c. Leave a vertical clearance for blank-out signs shall be a minimum of 17 ft. (5.2 m) above the roadway surface.

d. Use a spirit level to verify that the bottom edge of each sign is horizontal.

e. Label all LED modules with their turn on date on the backside of the LED insert.

I. Pedestrian Signal Faces

1. Install pedestrian signal faces as directed in the contract.
2. Install the pedestrian signal faces as shown on the Standard Detail Drawings.
3. Leave a vertical clearance from the bottom of the pedestrian signal face to the ground at a preferred height of 10 ft. (3 m) unless specified in the contract or by the Department.
4. Use serrated locking devices that firmly hold the pedestrian signal faces in the required alignment.

J. Cable

1. General
   a. Install and connect electrical cable to the proper equipment to produce an operating traffic control signal system.
   b. All wiring from the control cabinet assembly input and output files to field terminations shall be in accordance with IMSA, NEMA, UL, and the Department's Traffic Signal Wiring Standards. Referenced IMSA specification cables and applications can be found in Section 925.
   c. Make a minimum 2 ft. (600 mm) diameter 3-turn weather drip loop as shown in the Standard Detail Drawings at the entrance to each traffic signal face.
   d. Neatly tie signal cables leaving a structure or weatherhead to enter a signal fixture. Tie the cables to the messenger cable as illustrated in the Standard Detail Drawings.
2. Traffic signal face
   a. Install one 7-conductor signal cable for each signal phase and right turn overlap from the controller cabinet assembly to the appropriate signal face.
   b. From this leftmost traffic signal face, install a 7-conductor signal cable to every other traffic signal face on the same phase, if present.
   c. The standard wiring color code for vehicular signal faces shall be in accordance with Table 4.

Table 4 – Vehicular Signal Face Wiring Standards					
Signal Indications/ Function	3-Section Signal Indications Seven Conductor Cable		5-Section Head	4-Section FYA and Right Turn Overlaps	3-Section FYA and Right Turn Overlaps
	Solid Ball Signal Indications (Typ. Phases 2, 4, 6, and 8)	Protected Only Turn Signal Indications (Typ. Phases 1, 3, 5, and 7)			
Red	Red Wire	N/A	Red Wire	N/A	N/A
Yellow	Orange Wire	N/A	Orange Wire	N/A	N/A
Green	Green Wire	N/A	Green Wire	N/A	N/A
Red Arrow	N/A	White Wire with Black Tracer	N/A	White Wire with Black Tracer	White Wire with Black Tracer
Yellow Arrow	N/A	Black Wire	Black Wire	Black Wire	Black Wire
Flashing Yellow Arrow	N/A	N/A	Orange Wire (Bi-Modal Indication Only)	Orange Wire	Orange Wire
Green Arrow	N/A	Blue Wire	Blue Wire	Blue Wire	Blue Wire
Neutral	White Wire	White Wire	White Wire	White Wire	White Wire
Spare(s)	White Wire with Black Tracer, Black and Blue Wires	Red, Orange, and Green Wires	N/A	Red, Orange, and Green Wires	Red, Orange, Blue and Green Wires
NOTE: 3-Section Bi-modal FYA shall use same wiring standard as a 4-section FYA.					

3. Pedestrian signal face
   a. Install one 7-conductor signal cable from the controller cabinet assembly to each location with a pedestrian signal face.
   b. Seven-conductor cable can operate either one or two pedestrian signal faces.
   c. The standard wiring color code for pedestrian signal faces shall be in accordance with Table 5.

Table 5 – Pedestrian Signal Face Wiring Standards		
Signal Indications/Function	Seven Conductor Cable	
	Phases 2 and 6	Phases 4 and 8
Don’t Walk	Red Wire	White Wire with Black Tracer
Walk	Green Wire	Blue Wire
Neutral	White Wire	White Wire

4. Not applicable

Table 6 – Not Applicable

K. Span Wire

1. Span Wire Sag Minimum Sag Requirements
   a. Meet minimum sag requirements specified by the pole manufacturer.
   b. Span wire used with strain pole installation shall have a minimum 5% sag.
   c. Span wire used with timber pole installation shall have a minimum 2.5% sag.
2. Span Wire Sag Calculation Requirements
   a. Sag is the amount of vertical drop measured from the pole attachment point to lowest part of the span.
   b. Allowable sag is calculated by measuring the longest distance between poles and multiplying by the desired percentage of sag, unless specified by the pole manufacturers.
   c. Calculate attachment points for the messenger strand at the signal pole according to the Standard Detail Drawings.
   d. Provide the Construction Manager or designee with sag calculations for review and approval.
3. Span Wire Type
   a. Use minimum 0.375 in. (9.5 mm) span wire to support traffic signal faces, signal conductors, and other hardware only. Larger messenger cable shall be used as required based on span calculations.
   b. Use minimum 0.25 in. (6.35 mm) messenger cable to support the aerial communications cable plant and aerial loop lead installations.
   c. All messenger strand installations shall include standard industry bonding and grounding including NEC Article 770 and NESC Section 9.
   d. Ground all span wire and down guy assemblies as shown on Standard Detail Drawings. Bond all span wire together and bond to ground at every pole.
   e. All cabling and messenger installed shall meet the requirements provided by the utility pole owner.
   f. Install span wire and messenger wire where specified in the contract and in accordance with the Standard Detail Drawings.
   g. Use helper cables where specified in the contract and on the Standard Detail Drawings.
   h. For construction of a box or modified box span, use bullrings. Be consistent throughout the intersection in use of bull rings or strand vices. If bull rings are not used, strand vices shall be interlocked.
4. Span Wire Cable Mounting
   a. When using aluminum wrap or aluminum ties, space at a maximum of 6 in. (150 mm) increments.
   b. Aluminum wrap shall have at least three turns of wrap.
   c. Use lashing wire only for aerial loop lead-in and fiber optic cabling.
5. Installation
   a. Attach cables to messenger cable using lashing wire, aluminum ties, or lashing rods.
   b. Verify that messenger strand clearances conform with local utility company standards.
   c. Only use lashing rods that are of the same material as the messenger strand.
   d. If lashing rods are used, use lashing rods sized for the cables and messenger strand.
   e. Before erecting the messenger strand, determine the suspension strand length to span the distance between the poles.
   f. Run the messenger strand from structure to structure without splicing.
   g. Drill wood poles to receive the eye bolts so that the span wire and eyebolt at each connection form a straight angle.

h. The angle of variance shall be continuously maintained at less than 10 degrees.

i. Attach down guy wires to guy hooks. Use a minimum 0.375 in. (9.5 mm) messenger cable for down guys.

j. Make stranded messenger cable attachment points with the appropriate size strand vices or two bolt suspension clamps.

k. Use standoff brackets as needed to prevent damage from poles, trees, or other structures.

L. Underground Cable for Signal Circuits

1. Install underground cable for signal circuits includes cable, with conduit, as shown in the contract.
2. Do not exceed 40% conduit fill per the NEC.
3. Pull cables into conduits without electrical or mechanical damage.
4. Pull all cables through a single conduit simultaneously.
5. Pull cables by hand only. The use of trucks or other motorized equipment is not permitted, unless approved by the Department. If mechanical pulling is approved, do not exceed the manufacturer's tension rating for the cable.
6. Pull cables with a cable grip that firmly holds the exterior covering of the cable.
7. Handle and install the conductors to prevent kinks, bends, or other distortion that may damage the conductor or outer covering.
8. Use powdered soapstone, talc, or other inert lubricants to place conductors in conduit according to manufacturer's recommendations.
9. When pulling cables through hand holes, pole shafts, etc., use a pad of firm rubber or other material between the cable and the opening edges to prevent cable damage.
10. Splicing of signal conductors is not permitted.

M. Communications Cable

See Section 935 for fiber optic cable communication system requirements.

N. Pull boxes

1. Install pull boxes as shown in the contract.
2. Verify that pull boxes conform to the Standard Detail Drawings.
3. Do not relocate pull boxes on the curb side of the signal pole in the intersection radius return.
4. Horizontal adjustments of less than 5 ft. (1.5 m) may be made to pull box locations to avoid obstacles, if necessary.
5. Orient pull boxes with the longest dimension parallel to the roadway.
6. Include provisions for drains in pull box excavations as specified.
7. Do not place the aggregate for the drain until the Department approves the excavation.
8. Do not set the pull box until the aggregate is in place.
9. Obtain the Department's approval and begin backfilling and installing the frame and cover.
10. The distance between pull boxes in a run of conduit shall not be greater than 100 ft (30 m), unless otherwise shown in the plans or approved by the Engineer, except for fiber optic cable.
11. Set the pull boxes in place, level, and install conduits.
    a. Conduit entrance shall be through the open bottom in Types 1, 2, 3, 4S, and 5S.
    b. Conduit entrance shall be directly through cored holes in the side walls in Types 4 and 5.
    c. Conduit entrance shall be through the conduit terminators in Types 6 and 7.

12. Where conduit entrance shall be through the side wall in Types 4 and 5, or for conduit other than the terminator size provided in Types 6 and 7, use field cored conduit entrance holes in the side wall of the box. All field coring shall be made with a diamond-tipped masonry hole saw and according to the pull box manufacturer's recommendations.
13. Use an approved HDPE to EPVC coupling or an underground-type conduit adhesive where joining conduit or conduit bodies of dissimilar materials, such as HDPE-to-EPVC sweeps into pull boxes or installing into pull box conduit terminators.
14. Install the pull box at a location that is level with the surrounding ground or pavement. Do not place a pull box in a ditch or depression. Unless otherwise shown in the contract, when installed either in a sidewalk or in the ground, the top of the pull box shall be level with the sidewalk or ground surface.
15. Metal lids or covers shall be properly grounded.
16. All pull boxes shall have "Traffic Signal" stamped on the lid.

O. Conduit and Fittings

1. Install conduit by type (GRS, HDPE, PVC) as shown in the contract.
2. Refer to the NEC for conduit fill percentages. Install additional conduits as necessary to meet 40 percent maximum fill.
3. Verify that conduit conforms to Section 682, Section 923, and Section 925 with the addition of flexible conduit only where shown in the Details or as directed to do so in writing by the Construction Manager or designee.
4. Use the conduit size specified in the contract. Obtain a supplemental agreement from the Department prior to installing conduit other than the size specified in the contract.
5. See Section 682.3 for the construction of underground conduit.
6. See Section 682.3 for the construction of encased conduit.
7. See Section 682.3 for the construction of backfilling conduit.
8. If a conduit fitting uses neoprene gasket, it will be utilized for waterproofing purposes.
9. In addition to the installation requirements of Section 682:
    a. Coat metallic conduit threads with red- or white-lead pipe compound, thermoplastic, or Teflon seal. Verify that they are securely connected.
    b. Install bushings in the conduit to protect the conductors.

P. Blank-out Signs

1. Install blank-out signs as shown in the contract.
2. Fasten the signs to a stationary structure or to a messenger strand support system.
3. Center each sign over the lane or lanes under sign control, where applicable.
4. Leave a vertical clearance for blank-out signs as shown in the contract.
5. Use a spirit level to verify that the bottom edge of each sign is horizontal.

Q. PHB Installation Requirements

1. Install PHB as shown in the contract.
2. Install solar or electrical power service as indicated in the contract.
3. Provide pedestrian detection system, controller cabinet assembly and necessary components for a fully functional PHB.

R. RRFB Installation Requirements

1. Install RRFB as shown in the Contract.
2. Install solar or electrical power service as indicated in the contract.

3. Provide pedestrian detection system.

S. Flashing Beacon

1. Furnish and install the flashing beacon controller at the locations shown in the contract.
2. Install it as a complete unit (solid state flasher and field cabinet with time clock, if applicable) and verify that it conforms to this section.
3. Install solar or electrical power service as indicated in the contract.

647.3.06 Training Requirements

See Section 937.4 for training requirements for detection systems.

647.4 Measurement

647.4.01 General

Traffic control signal items complete, in place, and accepted of the kind, size, and type specified are measured as follows:

A. Traffic Signal Installation

Complete and fully functional Traffic Signal installation, vehicular detection and pedestrian detection systems excepted, will be paid for by lump sum, including furnishing labor, materials, tools, equipment, and incidentals required to complete the work unless otherwise specified in this section.

Materials included in this pay item include:

1. Controller Cabinet Assembly and required interior components.
2. Controller unit.
3. All signal conductors (excludes wiring associated with detection systems).
4. Span wire and guy wires, if applicable.
5. Vehicle signal faces with backplates.
6. Pedestrian signal faces.
7. Pull boxes and conduits containing traffic control signal power service, signal conductors, inductance loop lead-in cables, communications drop cable, auxiliary devices and spare conduits.
8. Power service installation and monthly charges prior to acceptance
9. Grounding conductors and electrodes
10. All connections of grounding conductors of electrodes are by exothermic weld only.
11. Maintenance of equipment prior to acceptance.

The type of detection system specified in the contract shall be measured according to Section 937.4.

B. Not Applicable

C. PHB Installation

Complete and fully functional PHB installation will be paid for by lump sum, including furnishing labor, materials, tools, equipment, and incidentals required to complete the work unless otherwise specified in this section.

D. RRFB Installation

Complete and fully functional RRFB installation will be paid for by lump sum, including furnishing labor, materials, tools, equipment, and incidentals required to complete the work unless otherwise specified in this section.

E. Flashing Beacon Installation

Complete and fully functional flashing beacon installation will be paid for by lump sum, including furnishing labor, materials, tools, equipment, and incidentals required to complete the work unless otherwise specified in this section.

F. School Speed Zone Flashing Beacon Installation

Complete and fully functional School Speed Zone Flashing Beacon installation will be paid for by lump sum, including furnishing labor, materials, tools, equipment, and incidentals required to complete the work unless otherwise specified in this section.

G. Traffic Signs

Highway signs are measured and paid for under Section 636.

H. Strain Poles

Strain poles are measured and paid for under Section 639.

I. Conduit for Communications

Conduit for underground, trunk line communications is measured under Section 682.

J. Miscellaneous

Miscellaneous items will be measured as specified in the pay item. No Measurement will be made for individual items unless a pay item is included in the plans for the specific item.

647.4.02 Limits

Refer to General Provisions 101 through 150.

647.5 Payment

647.5.01 General

A. Full Payment

1. The lump price bid for traffic control devices covers all items of work in this section including furnishing labor, materials, tools, equipment, and incidentals required to complete the work. It excludes only the vehicle detection and pedestrian detection systems for applicable devices, which are paid for in Section 637.
2. Costs for installation shall include operation and maintenance costs until written acceptance is issued by the Construction Manager.
3. Include payment for removal; disposal of existing pavement, shoulder surface, base and sub-grade; and restoration to original condition in the contract price for the items to which they pertain. These will not be paid for separately.
4. Furnishing, installing, and removing sheeting, bracing, and supports will not be paid for separately, but is included in the contract prices for other items.
5. No additional payment will be made for testing and storing state-supplied or Contractor-furnished traffic control signal equipment.
6. No payment will be made for individual items unless a pay item is included in the contract for the specific item.
7. Payment will be made under:

Item No. 647	Traffic Signal Installation no-	Per lump sum
Item No. 647	PHB Installation no-	Per lump sum
Item No. 647	RRFB Installation no-	Per lump sum
Item No. 647	Flashing Beacon Installation, no-	Per lump sum
Item No. 647	School Speed Zone Flashing Beacon no-	Per lump sum

Payment for various elements of traffic control devices will be as shown in the contract.

B. Partial Payment

Prior to commencement of the work, the Contractor shall initiate a partial payment process for the lump sum traffic signal pay items by submitting a written payment schedule of the installation items for consideration and approval by the Construction Manager. The submittal should consider staged work. The Engineer's determination of any progress amount paid shall be final. In the event a submittal is not provided, the following schedule below shall be utilized.

Underground (pull boxes (if not paid for separately), and conduits)	20%
Overhead (span, vehicle signal faces, pedestrian signal faces)	30%
Cabinet, contents, and base (cabinet must be fully wired to signal and be ready for operation including written final acceptance from the Construction Manager or designee)	50%

C. Additional Items

Payment items related to Section 647 are described in the following sections:

Strain Poles	Section 639
Highway Lighting	Section 680
Electrical Wire, Cable, and Conduit*	Section 682
Grassing	Section 700
Timber Poles	Section 639 and Section 861.2.02
Sign Blanks	Section 912
Reflectorization Materials	Section 913
Detection Systems	Section 937

* Payment for communications conduit installation will be as described in Section 682. All other conduit installation as required for a traffic control signal installation shall be measured and payment made as part of the complete traffic control signal installation.

647.5.02 Adjustments

General Provisions 101 through 150.

Revised for Cobb County

Section 687 – Signal Timing

687.1 General Description

This work consists of providing, developing and implementing signal timing for an intersection in the adaptive traffic signal system SCATS, by a prequalified Contractor, a traffic signal operating plan designed to provide a safe and efficient operation of the Intersections included in this Special Provision. This work may include necessary controller and site license, system timing plan development, implementation and adjustment.

687.1.01 Deliverables

The following items shall be included:

- Controller and Site License (As required per intersection. Refer to Plans.)
- Update Intersection Graphics
- Provide the Current Software Version
- Develop Personality, Flexi-Link and Master-Link Signal Timing
- Implementation
- Provide Cabinet Graphic and Data-Key

687.2 Measurement

687.2.01 Construction Contracts

Traffic signal timing as specified complete and accepted is measured for payment per Lump Sum.

687.3 Payments

687.3.01 Construction Contracts

Traffic signal timing complete and accepted is measured for payment per Lump Sum. Price and payment is full compensation for all materials, labor, tools, equipment, supplies, testing, and incidentals to complete the item of work

Payment will be made under:

Item No. 687	Traffic Signal Timing	Per lump sum
Item No. 687	Traffic Signal Timing (No License Req'd)	Per lump sum

Revised for Cobb County

Section 925 – Traffic Control Signal Equipment

925.1 General Description

This section contains the requirements to furnish and provide warranty for traffic control signal equipment and materials as specified herein and shown in the contract.

The Standard Detail Drawings include information related to the equipment specified in Section 925, as noted in Table 1.

Table 1 – Standard Detail Drawing References	
Detail Name	Sheet
Inductive Loop Detector Installation	TS – 01A
Inductive Loop Detector Installation	TS – 01B
Prefabricated Cabinet Base	TS – 02
Pedestrian Facilities Installation	TS – 03
Traffic Signal Support Structures	TS – 04A
Traffic Signal Support Structures	TS – 04B
Strain Pole and Mast Arm Foundations	TS – 05
Grounding for Traffic Signal Support Structures	TS – 06
Utility Clearance	TS – 07
Guying	TS – 08
Fiber Optics Installation	TS – 09
Flashing Beacon Assembly Span Wire Installation	TS – 10A
Flashing Beacon Assembly Post Mounted Installation	TS – 10B

925.1.01 Definitions, Acronyms, and Abbreviations

A. Definitions

Refer to Section 942.1 for a list of additional definitions and terminology used in this section.

Advanced Transportation Controller (ATC): The ATC Standards are intended to provide an open architecture hardware and software platform that can support a wide variety of Intelligent Transportation Systems (ITS) applications including traffic management, safety, security and other applications.

Advanced Transportation Controller Cabinet (ATCC): Cabinet that utilizes high-speed serial communications for an increased number of detection inputs and signal outputs, increased monitoring and diagnostic capabilities, enhanced worker safety, simplified wiring, and reduced cabinet size.

CalTrans Cabinet Type L: Type of traffic control device equipment cabinet with an energy-efficient power supply, reduced circuit breaker sizes, solid state relays, service panel with raw and clean power circuits, main breaker and Uninterruptible Power Supply (UPS) standard interface.

Acronyms and Abbreviations

Refer to Sections 101.01 and 647.1 for a list of acronyms and abbreviations used in this section.

925.1.02 Related References

Standard Specifications

Section 500—Concrete Structures

Section 647—Traffic Control Signal Installation

Section 682—Electrical Wire, Cable, and Conduit

Section 861—Piling and Round Timber

Section 937 –Detection Systems

Section 939—Communication and Electronic Equipment

B. Referenced Documents

Standards and documents referenced throughout this Section are provided in Table 2.

Table 2 – Referenced Documents
ASTM A 123, Standard Specification for Zinc (Hot-Dip Galvanized) Coatings on Iron and Steel Products
ASTM A 153, Standard Specification for Zinc Coating (Hot-Dip) on Iron and Steel Hardware
ASTM A 325, Standard Specification for Structural Bolts, Steel, Heat Treated, 120/105 ksi Minimum Tensile Strength
ASTM A 36, Standard Specification for Carbon Structural Steel
ASTM A 475, Standard Specification for Zinc-Coated Steel Wire Strand
ASTM A 53, Standard Specification for Pipe, Steel, Black and Hot-Dipped, Zinc-Coated, Welded and Seamless
ASTM A 572, Standard Specification for High-Strength Low-Alloy Columbium-Vanadium Structural Steel
ASTM D 2444, Standard Practice for Determination of the Impact Resistance of Thermoplastic Pipe and Fittings by Means of a Tup (Falling Weight)
ASTM D 256, Standard Test Methods for Determining the Izod Pendulum Impact Resistance of Plastics
ASTM D 543, Standard Practices for Evaluating the Resistance of Plastics to Chemical Reagents
ASTM D 638, Standard Test Method for Tensile Properties of Plastics
ASTM D 785, Standard Test Method for Rockwell Hardness of Plastics and Electrical Insulating Materials
ASTM D 790, Standard Test Methods for Flexural Properties of Unreinforced and Reinforced Plastics and Electrical Insulating Materials
ATC 5201 v06A.34 Advanced Transportation Controller (ATC), January 12, 2018
ATC 5301 v2.02: Advanced Transportation Controller Cabinet (ATCC), March 12, 2019
CalTrans TEES 2009, November 5, 2020
Electronic Industries Standards EIA-310-B, Racks, Panels, and Associated Equipment, with 10-32 Universal Spacing threaded holes
FCC Part 15 of Title 47 of the CFR, Subpart B, Class B.
FHWA Interim Approval for Optional Use of Pedestrian-Actuated Rectangular Rapid-Flashing Beacons at Uncontrolled Marked Crosswalks (IA-21), March 20, 2018
The Department's QPL

Table 2 – Referenced Documents
The Department's QPL-75, Polyurethane Sealant for Inductive Loops
IEEE/ANSI C.62.41 Surge Suppression
IMSA Specification #50-2, Polyethylene insulated, polyethylene jacketed, loop detector lead-in cable
IMSA Specification #51-1, Polyvinyl chloride insulated, nylon jacketed loop detector wire
IMSA Specification #51-3, Cross linked polyethylene insulated loop detector wire
IMSA Specification #51-7, Cross linked polyethylene insulated loosely encased in a polyvinyl chloride or a polyethylene tube loop detector wire
ITE Pedestrian Traffic Control Signal Indicators – Light Emitting Diode (LED) Signal Modules, February 2011
ITE Vehicle Traffic Control Traffic Signal Faces – Part 3: Light Emitting Diode (LED) Vehicle Arrow Traffic Signal Modules, Current Edition
ITE Vehicle Traffic Control Traffic Signal Indications Specification, Current Edition
ITE Vehicle Traffic Control Traffic Signal Indications: Light Emitting Diode (LED) Circular Signal Supplement, Current Edition
Manual on Uniform Traffic Control Devices, Federal Highway Administration, latest edition.
NEMA Standard Publication TS 2-2001, Traffic Controller Assemblies with NTCIP Requirements
Pedestrian Traffic Control Signal Indicators-Light Emitting, ITE, Current Edition
UL 493, Standard Thermoplastic-Insulated Underground Feeder and Branch-Circuit Cables
UL 94, Standard for Tests for Flammability of Plastic Materials for Parts in Devices and Appliances

925.1.03 Submittals

Refer to Section 647.1.03 for submittal requirements.

925.2 Materials

925.2.01 General Requirements

A. General

1. Provide equipment that is new and not refurbished.
2. All equipment and equipment applications shall meet MUTCD requirements.
3. Provide device that complies with the limits of a Class A digital device, pursuant to FCC Part 15.

B. Materials Warranty

1. Refer to Section 647.3.02 for warranty transfer information to the Department.
2. The equipment provided under this section is warranted by the manufacturer to be free from defects in materials and workmanship for a minimum period of two years from date of receipt or one year from date of Maintenance Acceptance Letter, whichever is greater.
3. Exceptions for materials that have longer warranty durations is presented in Table 3.

Table 3 – Exceptions to Materials Warranty Requirements	
Pedestrian and LED Traffic Signal Face Indications	LED traffic signal modules and LED pedestrian modules are performance warranted to follow the ITE and CalTrans minimum intensity standards for LED traffic signal modules, measured at 120 VAC and 165ºF (74°C), for a period of 5 years. Manufacturer's name, part number, date code, and electrical characteristics of the LED signal module shall be visible on the unit for warranty purposes.
UPS	Manufacturers shall provide a two-year factory-repair warranty for parts and labor on the UPS from date of acceptance by the Department

4. The manufacturer shall repair or replace faulty equipment during the warranty period at no charge to the Department for parts, labor, and shipping to and from the factory.

C. Environmental

1. All equipment assemblies outside of the controller or flasher cabinet shall be placed in a NEMA Type 3R or 4x enclosure, unless specified otherwise in this section.
2. All equipment shall meet or exceed the temperature and humidity limits per current NEMA TS2 requirements, unless specified otherwise in this section.

925.2.02 Controller Assembly Requirements

A. General

1. Documentation
   a. Provide manuals that document the controller programming, operation, and maintenance.
   b. Include schematic drawings and pin assignment charts in the manuals to support maintenance activity.
   c. Include all components, including communications modules, in documentation.
   d. Required documentation includes the documentation listed in Section 1.2.4 in the CalTrans TEES.
2. Configuration
   a. Provide controller assembly that conforms with the input and output configurations shown in this section.
   b. Program the default input and output configurations shown in this section.
3. Testing
   a. Perform testing and provide complete testing results of the controller unit before it is shipped. If the controller unit is shipped with application firmware installed, it must be tested with the application (e.g., traffic signal control).
   b. If a random sample of greater than 10% of the units tested fails, then the whole shipment shall be rejected, and the vendor will be responsible for the cost to test and repair the units.

B. Type 2070 Controller

1. 2070 controller assembly shall meet the State of California Business, Transportation, and Housing Agency; Department of Transportation TEES.
2. Provide Type 2070LX controller assembly with the following I/O configuration.
   a. CPU module version 2070-1C Single-Board.
   b. Power supply module versions 2070-4A or 2070-4N.
   c. Field I/O module version 2070-2E or 2070-E+.
   d. Front panel assembly version 2070-3B.

C. ATC Controller

1. ATC controller assembly shall meet ATC 5201 v06A.34.
2. As part of the submittal package, provide detailed information regarding the CPU module, power supply module, field I/O module and front panel assembly.

925.2.03 Type 2070 Controller Subassembly Requirements

A. CPU Module

1. Provide single-board CPU module version 2070-1C in conformance with CalTrans TEES with Errata 1, 2, 3, and 4.
2. Provide CPU module that contains the required files to be compatible with the Department's current applications software.
3. Provide CPU module with a minimum of two (2) RJ-45 Ethernet ports.

B. Power Supply Module

1. Provide power supply module version 2070-4A or 2070-4N in conformance with CalTrans TEES including Errata 1, 2, 3 and 4.
2. The power supply module may be supplied as a separate item.
3. The power supply module shall be an independent, self-contained module.
4. Provide power supply module that is vented and cooled by convection only.
5. Provide power supply module that slides into power supply compartment from the back of the chassis and is attached to the backplane mounting surface with four #3 TSD thumbscrews.
6. The power supply module shall supply a minimum of 10A of +5 VDC.
7. Provide power supply module that is compatible with Model 2070LX controller assembly and the Department's current traffic signal operating system.
8. Mark the model of the power supply module clearly on the unit.

C. Field I/O Module

1. Provide field I/O module version 2070-2E or 2070-E+ in conformance with CalTrans TEES with Errata 1 and 2, 3 and 4.
2. The field I/O module may be supplied as a separate item.
3. Provide field I/O module that consists of the field controller unit; parallel input/output ports; other module circuit functions (includes muzzle jumper); serial communication circuitry; module connectors C1S, C11S, and C12S mounted on the module front plate; VDC power supply (+12 VDC to +5 VDC); and required software.
4. Provide field I/O module configuration jumpers that are compatible with the Department's current traffic signal software.
5. Verify that the field I/O module functions with a Model 2070LX controller assembly and compatible with the Department's current traffic signal software.

D. Front Panel Display Module

1. Provide front panel assembly version 2070-3B CalTrans TEES including Errata 1, 2, 3 and 4.
2. The front panel display module may be supplied as a separate item.
3. Provide a front panel display module that includes a front panel assembly controller, two keyboards, AUX switch alarm bell, and 8 line by 40-character display.
4. Provide a panel with latch assembly and two TSD #1 thumbscrews hinge attachments, assembly PCB, external serial port connectors, CPU active LED indicator, contrast adjustment, and front panel harness.
5. Verify front panel display module configuration jumpers are compatible with the Department's current traffic signal software.

6. Verify the front panel display module functions with a Model 2070LX controller assembly and is compatible with the Department's current traffic signal software.
7. Verify the hardware hinge attaching devices mate with existing 2070 assemblies.
8. Verify the front panel harness is connected to the front panel via a removable connector.
9. Verify the front panel connector supports the auxiliary switch.

925.2.04 Signal Monitor for L Series Traffic Signal Cabinets

A. General

1. Provide signal monitor that complies with specifications outlined in the referenced CalTrans TEES with Errata 1, 2, 3, and 4. This specification governs where differences occur.
2. Provide a signal monitor that can monitor 18 channels, as required by the Contract at each location. Eash monitored output shall consist of the green, yellow, and red inputs for each channel.
3. Conflict Monitoring
   a. The signal monitor shall detect the presence of conflicting green or yellow signal voltages on the AC field terminals between two or more non-compatible channels.
   b. A conflict fault (CONFLICT) shall be a latching fault.
4. Conflict Recognition Time
   a. The signal monitor shall trigger a CONFLICT when voltages on conflicting channels are present for more than 500 ms.
   b. The signal monitor shall not trigger a CONFLICT when voltages on conflicting channels are present for less than 200 ms. Conflicting signals sensed for more than 200 ms and less than 500 ms may or may not trigger the unit.
5. 24 VDC Monitoring VDC
   a. The signal monitor shall detect when the cabinet +24 VDC supply falls below 18 VDC.
   b. A 24 VDC failure (VDC FAIL) shall be a latching fault.
6. 24 VDC Recognition Time
   a. The signal monitor shall trigger VDC FAIL when the voltage on the +24V input is below 18 VDC for more than 500 ms.
   b. The signal monitor shall not trigger VDC FAIL when the voltage on the +24V input is below 18 VDC for less than 200 ms. A voltage level of +22 VDC will be required to prevent the unit from triggering.
7. Controller Watchdog Monitoring (WDT)
   a. The signal monitor shall trigger when the controller unit's watchdog input does not toggle within the programmed time period (WDT ERROR).
   b. A WDT ERROR shall be a latching fault.
   c. The signal monitor remains latched in the fault state until reset by the reset button, an external reset input command, or AC line voltage restoring from an AC line brownout event.
   d. A reset resulting from an AC line brownout event shall not clear the WDT ERROR.
8. Controller Watchdog Latch Option
   a. The signal monitor shall have a programming option that sets the watchdog monitoring function to a latching mode and only resets by the manual the reset button or external reset input.
   b. An AC line brownout condition shall not reset the fault.
9. Controller Watchdog Recognition Time

a. The signal monitor shall have a programming option that sets the maximum watchdog recognition time to 1,000 to 1,500 ms, ±100 ms.

10. Controller Watchdog Enable Switch
    a. Provide an internal switch to disable the watchdog monitoring function.
    b. Mount the switch on the PCB and clearly label WD ENABLE - ON...OFF.
    c. Placing the switch in the OFF position shall inhibit watchdog monitoring.
11. WDT ERROR LED Control
    a. The WDT ERROR LED shall illuminate when the unit has been triggered by a watchdog fault.
    b. If the watchdog monitoring function is inhibited due to the watchdog enable switch, the WDT ERROR LED shall flash at a 0.5 Hz rate.
12. AC Line Monitoring
    a. AC Line Brownout Recognition
        i. Verify that the signal monitor can detect that the AC line has fallen below 98 ±2 VAC for greater than 400 ±50 ms. This shall force the output relay to the de-energized fault state, enable the stop-time output, and cause the AC POWER LED to flash at a 2 Hz rate.
        ii. Verify that the unit maintains this state until the AC line voltage rises above 103 ±2 VAC for greater than 400 ±50 ms.
        iii. Provide a jumper option that will change the AC brownout dropout level to 92 ±2 VAC and the restore level to 98 ±2 VAC.
    b. AC Line Power-up and Brownout Delay Time
        i. When the AC Line is greater than 103 ±2V after power-up or brownout restore, verify that the Signal Monitor holds the output relay in the de-energized fault state and enable the stop-time output for a period of not less than 6.0 ±0.5 sec and not greater than 10.0 ±0.5 sec.
13. Red Fail Monitoring
    a. The Signal Monitor shall detect the absence of an active voltage on the green, yellow and red field signal inputs of a channel.
    b. Red fail fault (RED FAIL) shall be a latching fault.
14. Red Fail Recognition Time
    a. Verify the Signal Monitor triggers when an active voltage on one of the three inputs of a channel is absent for more than 1,500 ms.
    b. Verify that the Signal Monitor does not trigger when an active voltage on one of the three inputs of a channel is absent for less than 1,200 ms. Channels without proper voltages sensed for more than 1,200 ms and less than 1,500 ms may or may not trigger the unit.
    c. Provide an option switch (RF 2010) that will change the fault recognition time to between 700 ms and 1,000 ms.
15. Dual Indication Monitoring
    a. Verify that the Signal Monitor can detect the presence of active voltage on the green and yellow field signal inputs of a channel.
    b. Green/Yellow/Red (GYR) Dual Indication fault (DUAL IND) shall be a latching fault.
    c. When selected by the GYR ENABLE switch, verify that the GY Dual Indication monitoring function is disabled when pin #EE is active.
16. Dual Indication Recognition Time
    a. Verify that the Signal Monitor triggers when multiple inputs are active on a channel for more than 500 ms.

b. Verify that the Signal Monitor does not trigger when multiple inputs are active on a channel for less than 250 ms. Channels with multiple voltages active for more than 250 ms and less than 500 ms may or may not trigger the unit.

17. Clearance (Short or Absent Yellow) Monitoring

a. Verify that the Signal Monitor can detect that a channel has not provided a yellow clearance interval during a green to yellow to red sequence.

b. A sequence failure (SEQUENCE) shall be a latching fault.

c. Verify that the sequence monitoring function is enabled for all selected channels except when the Red Enable input is not active or pin #EE is active.

18. Clearance Recognition Time

a. Verify that the yellow clearance interval is a minimum of 2.7 sec.

19. Flickering Indication Detection

a. Verify that the Signal Monitor provides a method of detecting Conflict, Red Fail, and Dual Indication faults that result from intermittent or flickering signal inputs that may not meet the minimum duration requirement.

b. The flickering indications shall result in a latching fault with an indication illuminated along with the resulting Conflict, Red Fail, or Dual Indication indicator.

20. Configuration Change Monitoring

a. On power-up, reset, and periodically during operation, verify that the Signal Monitor compares the current configuration settings with the previously stored value and if the settings have changed, the Signal Monitor automatically logs the new setting.

b. Verify that the settings include the permissive diode matrix, switches, jumpers, and the Watchdog Enable switch.

c. Provide a programming option such that change in the configuration parameters will cause the Signal Monitor to enter the fault mode, causing the output relay contacts to close and enabling the stop-time output to the controller.

d. To indicate the fault mode, verify that the PCA indicator will flash at a 4 Hz rate.

e. Depressing the Reset button for a minimum of 5.0 sec is required to clear the fault and log the new configuration parameters.

f. If the programming option is not selected, verify that the unit does not set the fault mode but will still log the configuration change.

21. Exit Flash

a. When the Signal Monitor exits the flash state (output relay de-energized) as a result of a Reset command or AC Line brownout restore, verify that the stop-time output goes to the inactive state 250 ±50 ms before the output relay transfers to the energized state.

b. The transition shall provide an early indication to the controller unit that the cabinet will transfer from flash to signal operation.

22. Display Functions

a. Verify that it is possible to view the active channels for each individual color (GYR) during operation and when latched in a fault state.

b. When the Signal Monitor is latched in a fault state, verify that it is also possible to view the active channels for each individual color and fault status for each channel for the current fault and the two previous faults.

i. When triggered by a fault, the channel status display shall alternate between the channels that were involved in the fault (fault status) for 2 sec and the field signals active at the time of the fault for 6 sec.

ii. The channels involved in the fault shall flash their respective green, yellow, and red indicators simultaneously at a 4 Hz rate for the 2 sec interval.

iii. The two previous faults may also be displayed individually.

iv. The status is not reset by an AC Line power interruption.

v. To enter the display mode, remove the program card. The sequence is shown in Table 4.

Table 4 – Sequence of Display Mode

Reset	Event	PCA LED	Fault Status LEDs	Channel Status LEDs
---	#1	Single flash	Current Fault Status (newest)	Current Field status
#1	#2	Double flash	Event #2 Fault Status	Event #2 Field status
#2	#3	Triple flash	Event #3 Fault Status (oldest)	Event #3 Field status
(repeats back to top)				

23. Event Logging Functions
    a. Verify that the Signal Monitor can store a minimum of 100 events in non-volatile memory.
    b. Mark each event with the time and date of the event. The events consist of fault events, AC Line events, reset events, and configuration change events.
    c. Provide a graphical means of displaying the signal states of all field inputs for 30 sec prior to a fault trigger event.
    d. Provide the capability to assign a four-digit identification number to the unit.
    e. Upload the event logs to a PC using the RJ-45 of the Signal Monitor and provided.
    f. Verify each event log report contains the following information:
        i. Monitor ID#: a four-digit (0000-9999) ID number assigned to the monitor.
        ii. Time and Date: time and date of occurrence.
        iii. Event Number: the record number in the log. Event #1 is the most recent event.
24. Monitor Status Report (CS): Verify the Current Status report contains the following information:
    a. Fault Type: the fault type description.
    b. Field Status: the current green, yellow, or red (GYR) field status and field RMS voltages (Vrms) if the monitor is not in the fault state, or the latched field status and field RMS voltages and fault channel status at the time of the fault.
    c. Cabinet Temperature: the current temperature if the monitor is not in the fault state, or the latched temperature at the time of the fault.
    d. AC Line Voltage: the current AC Line voltage if the monitor is not in the fault state, or the AC Line voltage at the time of the fault.
    e. Control Input Status: the current state and RMS voltages of the Red Enable input, EE input, and Special Function #1 and #2 inputs if the monitor is not in the fault state, or the status latched at the time of the fault.
25. Previous Fault Log (PF): Verify the Previous Fault log contains the following information:
    a. Fault Type: the fault type description.
    b. Field Status: the latched field status with RMS voltages and fault channel status at the time of the fault.
    c. Cabinet Temperature: the latched temperature at the time of the fault.
    d. AC Line Voltage: the AC Line voltage at the time of the fault.
    e. Control Input Status: the latched state of the Red Enable input, EE input, and Special Function #1 and #2 inputs at the time of the fault.

26. AC Line Event Log (AC): The AC Line log shall contain the following information:
    a. Event Type: the type of AC Line event that occurred.
        i. Power-up—AC on, monitor performed a cold start
        ii. Interrupt—AC Line < Brownout level
        iii. Restore—AC restored from brownout or interruption (AC Off), no cold start
    b. AC Line Voltage: the AC Line voltage at the time of the event.
27. Monitor Reset Log (MR): Verify the Monitor Reset log contains the following information:
    a. Event Type: The monitor was reset from a fault by the front panel Reset button or External Reset input.
    b. Time and Date: the time and date of the event.
28. PC Communications
    a. Have the manufacturer provide software to access the Signal Monitor status and event logs.
    b. Verify the software operates with the current version of Microsoft Windows.
29. Red Monitoring
    a. Red Field Inputs
        i. Verify that the Signal Monitor is capable of monitoring 18 Red field signals.
        ii. Verify that a Red input is sensed active when the input voltage exceeds 70 Vrms.
        iii. Verify that a Red input is sensed not active when the input voltage is less than 50 Vrms. A Red input may or may not be sensed active when the input voltage is between 50 Vrms and 70 Vrms.
    b. Red Enable Input
        i. Verify that the Red Enable input provides an AC input to the unit that enables Red Monitoring, Dual Indication Monitoring, and Sequence monitoring when the input is sensed active.
        ii. Verify that the Red Enable input is sensed active when the input voltage exceeds 70 Vrms.
        iii. Verify that the Red Enable input is sensed not active when the input voltage is less than 50 Vrms. The Red Enable input may or may not be sensed active when the input voltage is between 50 Vrms and 70 Vrms.
    c. Special Function Preemption Inputs
        i. Verify that the Special Function Preemption #1 and #2 inputs provide an AC input to the unit that disables only Red Fail Monitoring (Lack of Output) when either input is sensed active.
        ii. Verify that a Special Function input is sensed active when the input voltage exceeds 70 Vrms.
        iii. Verify that a Special Function input is sensed not active when the input voltage is less than 50 Vrms. A Special Function input may or may not be sensed active when the input voltage is between 50 Vrms and 70 Vrms.
        iv. Use a PCB-mounted switch to provide the option to invert the active status of the Special Function #1 input.
        v. Verify that the Special Function #1 input is sensed active when the input voltage is less than 50 Vrms. The Special Function #1 input may or may not be sensed active when the input voltage is between 50 Vrms and 70 Vrms.
    d. Red Interface Connector
        i. Provide connector with the required inputs for the unit to monitor the red field signal outputs.
        ii. Verify the connector is a 20-pin connector that mates with the P20 Cable from the output file.
        iii. Provide a high-quality connector that is polarized to verify proper mating with the cable.
        iv. Verify ejector latches are included to facilitate removal and prevent the cable from inadvertently disconnecting.

v. Verify the unit functions as a standard 210 Signal Monitor when the cable is disconnected.

vi. Use the pin assignments shown in Table 5.

Table 5 – Red Interface Connector Pin Assignments			
Pin	Function	Pin	Function
1	Channel 15 Red	11	Channel 9 Red
2	Channel 16 Red	12	Channel 8 Red
3	Channel14 Red	13	Channel 7 Red
4	Chassis Ground*	14	Channel 6 Red
5	Channel 13 Red	15	Channel 5 Red
6	Special Function #2	16	Channel 4 Red
7	Channel 12 Red	17	Channel 3 Red
8	Special Function #1	18	Channel 2 Red
9	Channel 10 Red	19	Channel 1 Red
10	Channel 11 Red	20	Red Enable
*A jumper option shall be provided to enable the connection of Pin #4 to be made with Chassis Ground.			

30. Front Panel

a. Verify the model information is permanently displayed on the front surface.

b. Verify the front panel is constructed of aluminum with a minimum thickness of 0.090 in. (2.3 mm) and finished with an anodized coating.

c. Verify that all display indicators are mounted on the front panel of the Signal Monitor and are water clear, T-1 package, Super Bright type LEDs.

d. Verify that all fault LEDs are red except the AC POWER indicator, which is green.

e. Provide a separate red, yellow, and green indicator for each channel.

f. Label the indicators and provide the information as follows:

i. AC Power: Verify the AC Power indicator flashes at a rate of 2 Hz when the unit has detected a low voltage condition as described in Section 925.2.04.A.13. Verify the AC POWER indicator flashes at a rate of 4 Hz during the minimum flash interval. Verify that the indicator illuminates when the AC Line voltage level is restored above the brownout level. Verify the indicator extinguishes when the AC Line voltage is less than 80 VAC.

ii. VDC Failed: Verify the VDC FAILED indicator illuminates when a 24 VDC fault condition is detected. The indicator remains extinguished if the monitor has not been triggered by a 24 VDC fault.

iii. WDT Error: Verify the WDT ERROR indicator illuminates when a controller Watchdog fault is detected. Verify the WDT Error indicator flashes ON once every 2 sec if the WD Enable switch on the monitor is placed in the OFF position to disable Watchdog monitoring, or the AC Line voltage is below the Watchdog disable level.

iv. Conflict: Verify that the CONFLICT indicator illuminates when a conflicting signal fault is detected.

v. Diagnostic: Verify the DIAGNOSTIC indicator illuminates when one of the following faults is detected: Internal Watchdog fault, Memory Test fault, or Internal power supply fault. The indicator is intended to inform the service technician of a monitor hardware or firmware failure.

vi. Red Fail: Verify the RED FAIL indicator illuminates when an absence of signal is detected on a channel. Verify the RED FAIL indicator flashes ON once every 2 sec if the RED ENABLE input is not active, or a Special Function input is active, or the EE input is active

vii. Dual IND: Verify the Dual IND. indicator illuminates when a GY-Dual or GYR-Dual Indication fault is detected on a channel.

viii. Clearance: Verify the Sequence indicator illuminates when the minimum yellow clearance time has not been met on a channel.

ix. PCA: Verify the PCA indicator illuminates if the program card is absent or not properly seated. If the unit is in the Diagnostic Display mode, verify the PCA indicator flashes ON (once, twice, or three times) to indicate the fault event number being displayed.

x. RP Detect: Verify the RP DETECT indicator illuminates when the unit has detected a Conflict, Red Fail, or Dual Indication fault as a result of recurring pulse field inputs.

xi. Channel Status: Verify that during normal operation the 48 channel status indicators display all active signals (red, green, and yellow). In the fault mode, verify that the Channel Status indicators display all signals active at the time of the fault for 6 sec and then indicate the channels involved in the fault for 2 sec.

31. Front Panel Control-Reset Button

a. Provide a momentary single pole, single through switch labeled RESET on the unit front panel to reset the monitor circuitry to a non-failed state.

b. Position the switch on the front panel such that the switch can be operated while gripping the front panel handle.

c. Verify that a reset command issued from either the front panel button or External Reset input is a one- time reset input to prevent the unit from constant reset due to a switch failure or constant external input and causes all LED indicators to illuminate for 300 ms.

d. Verify the Reset button provides control of the Diagnostic Display mode.

32. Electronics

a. RMS Voltage Sampling

i. Use high speed sampling techniques to determine the true RMS value of the AC field inputs.

ii. Sample each AC input at least 32 times per cycle.

iii. Verify that the RMS voltage measurement is insensitive to phase, frequency, and waveform distortion.

b. Internal MPU Watchdog

i. Use a microprocessor for all timing and control functions.

ii. Verify continuing operation of the microprocessor by an independent monitor circuit that forces the output relay to the de-energized fault state, enables the stop-time output, and illuminates the DIAGNOSTIC indicator if a pulse is not received from the microprocessor within 300 ms.

iii. If the microprocessor resumes operation, verify the Signal Monitor continues to operate.

iv. Verify that the monitoring circuit is also configurable to latch in the fault state.

v. Verify the unit requires a power-up cycle to reset the circuit once it is triggered.

c. Sockets

i. Provide only PROM memory device for the microprocessor firmware is socket mounted.

ii. Verify that the PROM memory socket is a precision screw machine type socket with a gold contact finish that provides a reliable gas tight seal. Low insertion force sockets or sockets with wiper type contacts are not acceptable.

d. Internal Power Supply

i. Use a built-in, high-efficiency switching power supply to generate required internal voltages.

ii. Verify that all supply voltages are regulated.

iii. Failure of the internal power supply to provide proper operating voltages shall force the output relay to the de-energized fault state, enable the stop-time output, and illuminate the DIAGNOSTIC indicator.

iv. Provide a user replaceable slow blow fuse for the AC Line input.

v. Provide unit that is operational over the AC Line voltage range of 75 VAC to 135 VAC.

33. RJ-45 Interface

a. The RJ-45 port interface shall be electrically isolated from all monitor electronics except chassis ground.

34. Configuration Parameters

a. Select user-programmed configuration settings using PCB-mounted switches or jumpers. Designs requiring a PC to program or verify the configuration parameters are not acceptable.

b. Verify that user-programmed configuration settings that are transferred to memory are stored in a PROM or EEPROM. Designs using a battery to maintain configuration data are not acceptable.

35. Field Terminal Inputs

a. Verify that all 120 VAC field terminal inputs provide an input impedance of 50K to 150K ohms.

b. Verify 120 VAC field terminal inputs are terminated with a discrete resistor having a power dissipation rating of 0.5 W or greater and a voltage rating exceeding 350 V.

36. Printed Circuit Boards

a. Verify that all printed circuit boards meet the requirements of the California TSCES, January 1989.

b. Meet the following requirements.

i. All plated-through holes and exposed circuit traces are plated with solder.

ii. Both sides of the printed circuit board are covered with a solder mask material.

iii. The circuit reference designation for all components and the polarity of capacitors and diodes are clearly marked adjacent to the component.

iv. Verify Pin #1 for all integrated circuit packages is designated on both sides of all printed circuit boards.

v. All electrical mating surfaces are gold plated.

vi. All printed circuit board assemblies are coated on both sides with a clear moisture-proof and fungus-proof sealant.

vii. All components and wire harnesses are mounted to the PCB using plated holes. Piggy back connections or jumper wires are not acceptable.

B. Type 2018 Signal Monitor

1. Provide Model 2018 Monitor Unit in accordance with CalTrans TEES with Errata 1, 2, 3 and 4.

2. Meet the following requirements for monitor functions.

a. Conflict Monitoring

i. Verify that programming of the permissive matrix is contained in the memory key.

ii. AC Line Power-up and Brownout Delay Time

a) Verify that the flash interval is terminated after at least 6.0 ±0.5 sec if the Signal Monitor has detected at least five transitions of the Watchdog input.

b) If the Signal Monitor does not detect five transitions of the Watchdog input before 10.0 ±0.5 sec, verify that the Signal Monitor goes to the fault state.

c) During the interval, verify that the AC POWER LED flashes at a 4 Hz rate.

d) Verify that the memory key Minimum Flash Time parameter has a range of zero and from 6 to 16 sec.

b. Red Fail Monitoring

i. Verify that the Red Fail monitoring function is enabled in the memory key on a per channel basis except when the Red Enable input is not active, or pin #EE is active, or Special Function #1 input is active, or Special Function #2 input is active.

c. Red Fail Recognition Time

i. Verify that a memory key Red Fail Timing option is provided that will change the fault recognition time between 700 ms and 1,000 ms.

d. Red Interface Cable Fault

i. Provide a memory key programming option such that operating without the Red Interface cable installed causes the Signal Monitor to enter the fault mode, causing the output relay contacts to close and enabling the stop-time output to the controller.

ii. To indicate the fault mode, verify that the Red Fail indicator is illuminated with all fault channel indicators off.

iii. Verify that Red Fail preemption control to the monitor uses the Special Function #1 or #2 input.

e. Dual Indication Monitoring

i. Verify the function is enabled in the memory key on a per channel basis for green and yellow combinations, green and red combinations, and yellow and red combinations.

ii. Verify that the GYR Dual Indication monitoring function is enabled for all selected channels except when the Red Enable input is not active or pin #EE is active.

f. GY Dual Indication Monitoring

i. Enable the function with a dip switch on the PCB labeled GY ENABLE.

ii. When the switch is in the ON position, monitor all channels for simultaneous active green and yellow inputs on a channel.

g. Clearance (Short or Absent Yellow) Monitoring

i. Verify that the function is enabled in the memory key on a per channel basis.

h. Flickering Indication Detection

i. Provide a programming option on the memory key to disable the RP Detect function.

i. Memory Key Error

i. Verify that when the memory key is removed or when a nonvalid Memory key is inserted, the Signal Monitor forces the output relay to the de-energized fault state, enables the stop-time output, and illuminates the KEY indicator.

ii. Verify that a reset command from the front panel Reset switch or External Reset input is required once a valid memory key is in place.

iii. Verify that failure to read the memory key correctly results in a memory key Error illuminating the KEY indicator.

j. Display Functions

i. Previous Fault GYR Display

a) To exit the display mode, replace the memory key.

ii. AC Line Event Log (AC): The AC Line log shall contain the following information:

a) Event Type: the type of AC Line event that occurred.

1) Power-up—AC on, monitor performed a cold start

2) Interrupt—AC Line < Brownout level

3) Restore—AC restored from brown-out or interruption (AC Off), no cold start

b) AC Line Voltage: the AC Line voltage at the time of the event.

iii. Configuration Change Log (CF): Verify the Configuration Change log contains the following information:

b) Memory key contents and additional programming parameters resulting from hardware configuration settings.

c) Changed items since the last log entry.

d) Time and date of the event.

iv. Signal Sequence Log:

b) Provide a log that graphically displays all field signal states for up to 30 sec prior to the current fault trigger event.

c) Verify that the resolution of the display is at least 50 ms.

k. Communications Functions

i. Verify that the Signal Monitor is compatible with the protocol of the Department's current operating system for 2070 controllers and Central System Control.

ii. Verify the 2018 Conflict Monitor can communicate via a RJ-45 connector (Ethernet).

l. Hardware

i. Monitor Configuration Programming

a) Verify monitor parameter programming is provided in a removable and interchangeable memory key (nonvolatile memory device) mounted on the front panel.

b) Monitor Unit Serial Memory Key

1) Verify that the monitor has a Datakey model KC4210 Keyceptacle socket or equal mounted on the front panel containing a Datakey model LCK4000-RED serial memory key or equal.

2) (Note: Datakey and Keycepticle are registered trademarks of Datakey Electronics, Inc.)

3) Verify that the serial memory key is rated for –40 to +176°F (–40 to +80°C) operation.

c) Monitor Unit Serial Memory Key Interface

1) Verify that the Signal Monitor does not provide the capability to program the serial memory key. It shall be used only as a read only device.

2) Verify that the 16-bit Frame Check Sequence (FCS) procedure defined in clause 4.6.2 of ISO/IEC 3309 is used to verify the integrity of the read data.

3) Verify that failure to read the serial memory key correctly results in a latched Diagnostic fault.

4) Verify that interface circuitry to the memory utilizes the LOFO switch on the serial memory key socket to verify the device is removed and inserted with no power applied to the interface pins (i.e., dead socket).

d) Memory Key Programming Tool

1) Verify the programming tool provides all the electronics necessary to read data from and write data to the memory key device.

2) Verify the programmer is configured to read and write to the Datakey model LCK4000, which provides 512 bytes of storage.

3) Verify power for the programming tool is obtained from the PC communications port so that no external power supply source is required.

e) Memory Key Programming Software

1) Verify that the manufacturer provides software to operate the memory key programming tool.

2) Verify that the memory key programming parameters are stored in a Windows file format according to currently used Signal Monitor identification number and name.

f) Parameter Forms

1) Provide a parameter form for each programmable Signal Monitor function.

2) Verify that Signal Monitor configuration data is entered on a parameter form and then saved to the main data buffer image.

3) When all parameter forms are completed verify that a write function transfers the contents of the data buffer to the nonvolatile memory of the memory key device.

4) Verify that reading the contents of a memory key device sets the parameters of each form for review or modification.

g) Memory Key Parameter Verify

1) Verify that a memory key Parameter Verify function compares the contents of a memory key device with parameters in the data buffer. The data buffer parameters may be set by changing parameters on the forms, reading the contents of a memory key device, or loading a set of parameters from a file.

h) Initial Parameter Setup Wizard

1) Verify that an Initial Parameter Setup wizard is provided that defines and sets a basic set of parameters for a new memory key setup.

2) Verify that the wizard asks a series of questions describing basic intersection setup and develop a template for the following parameters: Red Fail Monitoring, Dual Indication Monitoring, Clearance Monitoring, and Yellow Disable.

i) Parameter Check Wizard

1) Verify that a Parameter Check wizard is provided that will apply a set of basic configuration rules to the data buffer and provide a warning that configuration conflicts or inconsistencies may exist.

j) Parameter Reports

1) Verify that the contents of the data buffer are displayed in a hex format for numerical analysis. A text report shall also be printed that specifies all parameter settings.

k) Special Function Preemption Inputs

1) Verify that a programming option is provided in the memory key to invert the active status of the Special function #1 input. When the option is enabled, verify that the Special Function #1 input is sensed not active when the input voltage exceeds 70 Vrms.

ii. Output Relay

a) Verify the Signal Monitor Output Relay provides both normally open and normally closed contacts.

b) Verify a programming option is provided to select the polarity of the EE input to accommodate the flash drive voltage state drive on pin EE.

C. Not Applicable

Table 6 – Not Applicable

925.2.05 Cabinet Monitor Unit for the ATC Cabinet

The Model 2212 CMU shall meet the specifications set forth in Section 6.3 of the ATC 5301 v02.02, March 18, 2019.

925.2.06 Traffic Control Device Cabinet Assembly Requirements

A. General

The supplied Traffic Control Device Cabinet Assembly shall follow CalTrans cabinet type L as defined in the CalTrans TEES or the ATCC as defined in the ATC 5301 V2: Advanced Transportation Controller Cabinet (ATCC), published March 12, 2019.

In addition to the CalTrans L specifications, the provided cabinet assembly shall conform to the additional requirements listed below. The following supersedes the CalTrans TEES where differences occur.

1. Provide one or more of the cabinet types listed in Table 7 as specified in the Contract.

Table 7 – Traffic Control Device Cabinet Types

Cabinet Type	Description	Minimum Cabinet Dimension Range			Number of Doors
		Height	Width	Depth	
332(L)	Ground Mounted Traffic Control Signal Cabinet	64 in. to 67 in. (1.62 m to 1.70 m)	23 in. to 26 in. (0.58 m to 0.66 m)	24 in. to 30 in. (0.61 m to 0.76 m)	2
337(L)	Compact, Urban Area Pole Mounted Traffic Control Signal Cabinet	35 in. (0.89 m)	20 in. (0.51 m)	17 in. (0.43 m)	2
336S(L)	Pole Mounted Traffic Control Signal Cabinet	44 in. to 47 in. (1.12 m to 1.20 m)	23 in. to 26 in. (0.58 m to 0.66 m)	18 in. to 24 in. (0.46 m to 0.61 m)	2
342(L)	Ground Mounted Traffic Control Signal Cabinet	64 in. to 67 in. (1.62 m to 1.70 m)	44 in. to 46 in. (1.12 m to 1.17 m)	24 in. to 30 in. (0.61 m to 0.76 m)	4
332(ATC)	Ground Mounted Traffic Control Signal Cabinet	64 in. to 67 in. (1.62 m to 1.70 m)	23 in. to 26 in. (0.58 m to 0.66 m)	24 in. to 30 in. (0.61 m to 0.76 m)	2
342(ATC)	Ground Mounted Traffic Control Signal Cabinet	64 in. to 67 in. (1.62 m to 1.70 m)	44 in. to 46 in. (1.12 m to 1.17 m)	24 in. to 30 in. (0.61 m to 0.76 m)	4
NEMA Type 3R	Pole Mounted Flashing Beacon Cabinet	14 in. to 18 in. (0.35 m to 0.46 m)	10 in. to 14 in. (0.25 m to 0.35 m)	12 in. to 15 in. (0.30 m to 0.38 m)	1

2. Cabinets shall be equipped with the base equipment listed in Table 8.

Table 8 – Traffic Control Device Cabinet Base Equipment Requirements						
Cabinet Model	332(L)	336S(L)	337(L)	342(L)	332 (ATC)	342 (ATC)
Mounting	Ground	Ground or Pole	Pole	Ground	Ground	Ground
	Quantity					
Exhaust fans	2	2	2	4	2	4
Lower input field termination panel	1	1	0	1	1	1
Model 242L DC Isolator in Slot 14 of Upper Input File	1	1	0	1	1	1
Flash Transfer Relays	6	4	3	6	6	6
Model 204 Flashers	2	2	1	2	2	2
Input Files	2	2	1	2	2	2
Output Files	1	1	1	1	1	1
Auxiliary Output File Rack	1	**	0	1	1	1
Output/PDA Type 3 with Model 206 24 VDC Power Supply with flash transfer relay	0	0	0	0	0	0
Model 200 Load Switch	0	0	0	0	0	0
Model 208 Monitor Unit	0	0	0	0	0	0
Laptop Shelf	1	1	0	1	1	1
Manual push button assembly	1	1	1	1	1	1
Four Position Power Strip	1	1	1	1	2	2
M Base Adapter installed (336S Base Mount Cabinets Only)	0	*	0	0	0	0
Aluminum Cover Plate for Cabinet Bottom (336S Pole Mount Cabinets Only)	0	*	0	0	0	0

3. Locks
   a. Equip the main cabinet door with locks that accept No. 2 Corbin keys.
4. Provide two sets of keys with each cabinet. One set of keys is defined as one No. 2 key and one police panel (skeleton) key.Interior Cabinet Lighting
   a. Include LED ribbon light strips along the full perimeter of each inside door flange. A gap in the LED ribbon is permitted to avoid conflict points such as the door locking mechanism.
   b. Install a door-actuated switch to turn on the cabinet light, at the upper corner of the hinge side of the door.
   c. Cabinet lighting shall be active when either door is opened.

d. Provide hard wire connection to the cabinet AC power, controlled by a circuit breaker.

5. Cabinet Fans
   a. The cabinet ventilation shall include exhaust fans, filtration, fan assemblies, and environmental controls.
   b. Each electric fan shall be equipped with a ball or roller bearing and have a minimum capacity of 100 cubic feet per minute (cfm).
   c. The fan shall be mounted on the cabinet ceiling and exhaust directly to the vent.
   d. The fan shall be thermostatically controlled and shall be adjustable between 80°F - 150°F (27oC – 66oC) .
   e. Provide hard wire connection to the cabinet AC power, controlled by a circuit breaker.
6. Laptop Shelf
   a. Install hinged aluminum shelf and integrated storage compartment mounted on the inside of the front door.
   b. Laptop shelf shall have a smooth, non-slip surface for use as a writing platform and enough size and stability to support a typical laptop computer when extended.
   c. Provide laptop shelf that has rounded or insulated edges that prevent harm the user.
   d. Provide laptop shelf that folds upward for storage and locks into place.
   e. Provide laptop shelf that does not require the use of any tool for locking the shelf for storage or extending it for use.
7. The field wiring terminals may be mounted on the rear of the input file, if needed.
8. The cabinet has one shelf for the controller.
9. Equip the cabinet assemblies with a power distribution assembly to generate AC and DC power for the electronic components, except the DC power for the controller units.
10. Auxiliary Output File Rack
    a. Provide six (6) solid state flash transfer relays to enable all 18 channels to flash during backup operation.
    b. Provide a total of 18 flash jumper sockets to enable a flash color for all 18 output channels.
11. Manual Jack
    a. The manual jack shall be installed at the top of the EIA rail nearest the police panel.
    b. The jack shall intermate with a three circuit 0.25 in. (6.35 mm) diameter phone plug.
    c. The tip and ring (middle) circuits of the jack shall be connected to the logic ground and the interval advance inputs of controller unit.
    d. When the manual hand cord is plugged into the jack and the push button is pressed, logic ground shall be connected to the interval advance input of the controller unit.
12. Provide a manual ON-OFF switch on the police panel that grounds the Manual Control Enable (C1 Pin 53) input to the controller whenever the switch is in the ON position.Manual Push button
    a. Provide a manual push button cord with a minimum length of 6 ft. (1.8 m).
    b. Push button shall have a 0.25 in. (6.35 mm) diameter, three circuit plug connected to one end and a manual push button enclosed in a handheld enclosure at the other end.
    c. A complete cycle (push-release) of the manual push button shall terminate the controller unit interval, which is active except the vehicular yellow and all red clearance intervals.
    d. Cycling the push button during the vehicular yellow or all red clearance intervals shall not terminate the timing of those intervals.
    e. Button shall be fit within the police panel for storage.
13. Power Strip
    a. Provide metal bracket mounted vertically on the rear rail.

b. Verify that the power strip can host adaptor block power supplies in a manner that the block power supplies of cabinet accessories do not restrict use of other outlets.

c. Attach power strip to a permanent location that is easily accessible to devices in the rear of the cabinet.

d. Provide hard wire connection to the cabinet AC power, controlled by a 15A breaker.

14. Surge Protection

a. Equip each cabinet with devices to protect the control equipment from surges and over voltages.

b. Design the surge protector panels to enable adequate space for a wire connection and surge protector replacement without the removal of terminal blocks or panels.

c. Provide surge protectors for the input sections as detailed below and as shown in the Input Terminal and Surge Arrestor Detail.

d. Supply surge protectors that meet the following specifications.

i. AC Service Input

a) Include a surge protection unit for each cabinet on the AC service input that meets or exceeds the following requirements:

1) Provide a hybrid type power line surge protection device on the cabinet service panel.

2) Install the protector between the applied line voltage and earth ground.

b) Use a surge protector capable of reducing the effect of lightning transient voltages applied to the AC line that conforms to Table 9

Table 9 – Surge Protection Device Requirements for Power Service Input	
Peak surge current for an 8 x 20 ms waveform:	20,000A for 20 occurrences
Clamp voltage @ 20,000A:	280V maximum
Maximum continuous operating current:	@ 120V/60 Hz 10A
Series inductance:	AC Line/AC Neutral - 200 µH
Response time:	Voltage never exceeds 280V during surge
Spike suppression for ±700V spike:	±40V deviation from sine wave at all phases

c) Provide a protector that is modular and uses a 12 pin Beau connector with the following terminals:

1) Main Line (AC line first stage terminal)

2) Main Neutral (AC neutral input terminal)

3) Equipment Line In (AC line second stage input terminal, 10A)

4) Equipment Line Out (AC line second stage output terminal, 10A)

5) Equipment neutral out (neutral terminal to protected equipment)

6) GND (Earth connection)

d) Supply a protector that is epoxy encapsulated in a flame-retardant material.

e) Configure the equipment line out to provide power to the Type 2070 controller and to the 24V power supply.

ii. Inductance Loop Detector Inputs

a) Protect each inductance loop detector channel input by an external surge protection device that meets or exceeds the following requirements:

1) A three-terminal device, two of which are connected across the signal inputs of the detector with the third connected to the chassis ground to protect against common mode damage.
2) Instantly clamps differential mode surges (induced voltage across the loop detector input terminals) via a semiconductor array. The array appears as a low capacitance to the detector.
3) Clamps common mode surges (induced voltage between the loop leads and ground) via solid state clamping devices.
4) Withstand 25-100A surge current occurrences of a 10 x 700 ms waveform.
5) Clamp characteristics shall meet the minimum requirements in Table 10.

Table 10 – Surge Protection Clamp Requirements for Loop Detector Inputs	
Maximum break over voltage:	170V
Maximum on-stage clamping voltage:	3V
Response time:	<5 ns
Off-stage leakage current:	<10 mA
Capacitance:	less than 220 pf

b) Verify that the surge protection device meets the minimum requirements in Table 11.

Table 11 – Surge Protection Device Requirements for Loop Detector Inputs	
Peak surge current:	6 times
Differential mode:	400A (8 x 20 ms)
Common mode:	1,000A (8 x 20 ms)
Estimated occurrences:	500 @ 200A
Response time:	40 ns
Input capacitance:	35 pF typical
Temperature:	–40°F to +185°F (–40ºC to 85ºC)
Clamp voltage @ 400A diff. mode:	30V maximum
Clamp voltage @ 1,000A comm. mode:	30V maximum

iii. Signal Load Switches (Switchpacks)

a) Provide the output of all switchpacks in all output files and output/PDAs with metal oxide varistors (MOV) tied from the AC positive field terminal to the chassis ground to protect switchpacks from surges on the AC output lines.

b) Provide MOVs that meet or exceed the following requirements:

1) Steady state sinusoidal voltage (RMS) rating at 50 to 60 Hz of at least 150V at 77ºF (25°C).
2) Steady state applied DC voltage rating of at least 200V at 77ºF (25°C).
3) Transient energy rating of at least 80 J for a single impulse of 10/1,000 ms current waveform at 77ºF (25°C).
4) Peak current rating of 6,500A for a single impulse of 8/20 ms waveform with the rated continuous voltage applied

5) Varistor voltage of at least 212V at 1.0 mA of DC current applied for the duration of 20 ms to 5 sec.

6) Clamping voltage of at least 395V with an applied 8/20 ms impulse of 100A.

7) Typical capacitance at a frequency of 0.1 to 1.0 MHz of 1,600 pF.

8) Two-terminal device, one of which is connected to the AC output of the signal load switch on the output file terminals (backside of the field terminals) with the other connected to AC neutral

15. Low Voltage DC Inputs

Provide an external surge protection device for each low voltage DC input channel that meets the same requirements as the communication inputs except for the voltage clamp, which shall be 30V line-to-line.

16. Unused Phase Monitoring

Provide odd-phase reds with ballast resistor (2K, 10W) dummy loads.

Do not wire the cabinet to monitor pedestrian yellow indications.

When auxiliary output file is used, provide resistors for all channels.

Neatly lace, label, and bundle the wiring from the signal monitor for pedestrian yellow monitoring on the back panel.

17. Red Monitoring cable shall connect directly between the output file and monitor, without using a red enable board.

18. Provide Model 242L DC Isolators

Provide Model 242L DC Isolators in accordance with CalTrans TEES with Errata 1 and 2.

Provide Model 242L DC Isolators with polarity jumper.

19. Provide Model 200 Switchpacks that are in accordance with CalTrans TEES with Errata 1.

20. Provide Model 204 Flasher Units that are in accordance with CalTrans TEES with Errata 1 and 2.

21. Provide Flash Transfer Relays that are in accordance with CalTrans TEES with Errata 2.

B. Fabrication

1. The signal cabinet shall be manufactured of aluminum with a minimum thickness of 0.125 in. (3 mm).
2. The cabinet exterior shall have a smooth, uniform bare aluminum finish with all joints between adjoining cabinet components (sides and bottom) continuously welded on the outside to prevent the intrusion of moisture and dust.
3. The welds shall be free of cracks, blow holes, and other irregularities.
4. The shelves inside the cabinet shall be vented in order to enable air circulation throughout the cabinet.
5. Required shelves include those used for the controller input file, ethernet switch or modem, output file, and PDA.
6. The cabinet body shall be double flanged on all four sides to prevent the entry of dirt and liquids when the door is open.
7. Install a gasket formed around the door opening to ensure a weather-tight seal when the door is secured.
8. Install an aluminum back panel in the cabinet, mounted on standoffs, to facilitate mounting of internal components.
9. For pole mounted installations:
   a. Install exterior aluminum mounting brackets that extend a minimum of 1.75 in. (44 mm) and a maximum of 2.5 in. (63 mm) from the top and bottom of the cabinet.
   b. Provide the brackets with holes for mounting to a flat surface with screws and vertical slots for banding to poles.

C. Exceptions to CalTrans TEES and Errata 1, 2, 3 and 4.

1. Do not install the interlock circuit.
2. Meet input file wiring specifications in Tables 12, 13, and 14.

3. Meet surge suppression specifications are presented in Table 15.
4. Not Applicable

Table 12 – Models 332 and 342 Default Input File Assignments

Upper Input File (I)	Slot		1	2	3	4	5	6	7	8	9	10	11	12	13	14
	Type		Det	Det	Det	Det	Det	Det	Det	Det	Det			DC	DC	DC
	Channel 1	C1 Pin	56	39	63	47	58	41	65	49	60		80	67	68	81
		Function	Ph1	Ph2	Ph2	Ph2 C	Ph3	Ph4	Ph4	Ph4 C	Ph1		INT ADV	Ph2 PED	Ph6 PED	FLASH
		Field Term	TB-2 1,2	TB-2 5,6	TB-2 9,10	TB-4 1,2	TB-4 5,6	TB-4 9,10	TB-6 1,2	TB-6 5,6	TB-6 9,10		NC	TB-8 4,6	TB-8 7,9	NC
	Channel 2	C1 Pin	56	43	76	47	58	45	78	49	62		53	69	70	82
		Function	Ph1	Ph2	Ph2	Ph2 C	Ph3	Ph4	Ph4	PH4 C	Ph3		MCE	Ph4 PED	Ph8 PED	STOP TIME
		Field Term	TB-2 3,4	TB-2 7,8	TB-2 11,12	TB-4 3,4	TB-4 7,8	TB-4 11,12	TB-6 3,4	TB-6 7,8	TB-6 11,12		NC	TB-8 5,6	TB-8 8,9	NC

Table 12 – Models 332 and 342 Default Input File Assignments

Lower Input File (J)	Slot		1	2	3	4	5	6	7	8	9	10	11	12	13	14
	Type		Det	Det	Det	Det	Det	Det	Det	Det	Det			TBA	TBA	DC
	Channel 1	C1 Pin	55	40	64	48	57	42	66	50	59		54	71	72	51
		Function	Ph5	Ph6	Ph6	Ph6 C	Ph7	Ph8	Ph8	Ph8 C	Ph5			EVA	EVB	R/R
		Field Term	TB-3 1,2	TB-3 5,6	TB-3 9,10	TB-5 1,2	TB-5 5,6	TB-5 9,10	TB-7 1,2	TB-7 5,6	TB-7 9,10			TB-9 4,6	TB-9 7,9	TB-9 10,12
	Channel 2	C1 Pin	55	44	77	48	57	46	79	50	61		75	73	74	52
		Function	Ph5	Ph6	Ph6	Ph6 C	Ph7	Ph8	Ph8	Ph8 C	Ph7			EVC	EVD	
		Field Term	TB-3 3,4	TB-3 7,8	TB-3 11,12	TB-5 3,4	TB-5 7,8	TB-5 11,12	TB-7 3,4	TB-7 7,8	TB-7 11,12			TB-9 5,6	TB-9 8,9	TB-9 11,12

Table 13 – Model 336S Default Input File Assignments															
Slot		1	2	3	4	5	6	7	8	9	10	11	12	13	14
Type		Det	Det	Det	Det	Det	Det	Det	Det	DC	TBA	TBA	DC	DC	DC
Channel 1	C1 Pin	56	39	58	41	55	40	57	42	51	71	72	67	68	81
	Function	Ph1	Ph2	Ph3	Ph4	Ph5	Ph6	Ph7	Ph8	SE1	EVA	EVB	Ph2 PED	Ph6 PED	FLASH
	Field Term	TB-7 1,2	TB-7 5,6	TB-7 9,10	TB-8 1,2	TB-8 5,6	TB-8 9,10	TB-9 1,2	TB-9 5,6	TB-5 1,2	TB-5 5,6	TB-5 9,10	TB-4 1,2	TB-4 5,6	NC
Channel 2	C1 Pin	47	43	49	45	48	44	50	46	52	73	74	69	70	82
	Function	Ph2 Call	Ph2	Ph4 Call	Ph4	Ph6 Call	Ph6	Ph8 Call	Ph8	R/R	EVC	EVD	Ph4 PED	Ph8 PED	STOP TIME
	Field Term	TB-7 3,4	TB- 7 7,8	TB-7 11,12	TB-8 3,4	TB-8 7,8	TB-8 11,12	TB-9 3,4	TB-9 7,8	TB-5 3,4	TB-5 7,8	TB-5 11,12	TB-4 3,4	TB-4 7,8	NC

Table 14 – Not Applicable

Table 15 – Required Surge Arrestors for Cabinet Terminal Blocks	
Model 332 Cabinet Field Terminal Blocks	**Terminals**
TB-8	1-12
TB-9	10-12
TB-9	4-9
TB-2, TB-3, TB-4, TB-5, TB-6, TB-7	1-12
Model 336S Cabinet Field Terminal Block	**Terminals**
TB-4	1-12
TB-5	1-4
TB-5	5-12
TB-7, TB-8, TB-9	1-12
Note: Refer to Section 925.2.06.A.14 for the required arrestor for each of the terminal blocks listed above.	

Table 16 – Not Applicable

Table 17 – Not Applicable

D. Cabinet Model 337

1. Supply the cabinet assembly with capacity for 11 two-channel slots in the input file.
2. The cabinet has two full-size doors to enable complete access from the front or back of the cabinet.
3. Design the rack assembly to mount in CalTrans standard rails to enable a Model 204 flasher.
4. Provide a receptacle to accept the plug-in power distribution assembly card guides and edge connectors for the input file card guides to support the conflict monitor, and load switches and flash transfer relays.

E. Not Applicable

F. ATC Cabinet Model 332 and 342

1. The controller cabinet shall comply, without modification, based upon the referenced ATC:5301 v.02 specification.
2. Supply controller cabinet assembly in specified Model 332 or 342 cabinet shell as defined in the Contract.

925.2.07 Uninterruptible Power Supply Requirements

A. General

1. Provide UPS for outdoor applications in accordance with the CalTrans TEES.
2. Provide UPS that is compatible with CalTrans L Series and ATC Cabinets, Model 2070LX Controllers, and all other cabinet components for full-time operation.
3. Provide UPS inverter that is line interactive.
4. UPS Mounting Configurations
   a. See Contract for project-specific information about the UPS and select one of the following configuration options.
   b. Configuration options include:
      ii. Configuration 1: The UPS (Inverter/Charger, Bypass Switch, and Transfer Relay only) installed inside the cabinet, with the batteries installed in the externally mounted cabinet.
      iii. Configuration 2: The entire UPS, including batteries, installed inside the externally mounted cabinet.
      iv. Configuration 3: The entire UPS, including batteries, installed inside the traffic control device cabinet.

B. Functional Requirements

1. Provide battery capacity (A-hr) to provide a minimum 4 hours of run-time at an assumed 500 W load full operation of an intersection.
2. Provide minimum 1000 W at 25°C (77°F), with 80% minimum inverter efficiency.
3. Provide an inverter/charger, power transfer relay, batteries, a separate, manually operated non-electric bypass switch, hardware, and interconnected wiring.
4. The transfer time from disruption of normal utility line voltage to stabilized inverter line voltage from batteries, shall be a maximum of 5 ms. The same maximum transfer time shall also apply when switching from inverter line voltage to utility line voltage.
5. Recharge time for the battery, from protective low-cutoff to 80% or more of full battery charge capacity, shall not exceed 20 hours.
6. Provide LCD display for monitoring unit.
7. Provide four dry contact closures.
8. Provide automatic low-battery and high temperature shutdown features.
9. Provide capability to return to normal operations without a manual reset.

10. Provide UPS with a maximum audible noise of <50 dBA at 3 ft. (0.9 m).

C. Environmental

1. The UPS shall use a temperature-compensated battery charging system.
2. The charging system shall compensate over a range of 2.5 to 4.0 mV/°C (5 to 8 mV/°F) per cell.
3. Batteries shall not be recharged when battery temperature exceeds 50°C (122°F) ±3°C (6°F).
4. Temperature sensor
   a. Provide temperature sensor that is located external to the inverter/charger unit.
   b. Provide temperature sensor with 10 ft. (3 m) of wire.
   c. Provide temperature sensor that connected to the battery a with ring terminal to prevent loss of connectivity.

D. Electrical

1. For achieving a bypass of the UPS:
   a. The power transfer relay shall be rated at minimum 120 VAC/30A, or
   b. The bypass switch shall be rated at a minimum 120VAC/10A for triggering the transfer relay.
2. When utilizing battery power, the UPS output voltage shall be between 110 VAC and 125 VAC, pure sine wave
3. output, ≤3% THD, 60 Hz ±3 Hz.
4. UPS shall bypass the utility line power whenever the utility line voltage is outside of the following voltage range: 100 VAC to 130 VAC (± 2 VAC).
5. In cases of low (below 98 VAC) or absent utility line power, when the utility line power has been restored at above 105 VAC ±2 VAC for more than 30 sec, the UPS shall transfer from battery backed inverter mode back to utility line mode.
6. In cases of high utility line power (above 132 VAC), when the utility line power has been restored at below 125 VAC ±2 VAC for more than 30 sec, the UPS shall transfer from battery backed inverter mode back to utility line mode.
7. Provide capability to prevent a malfunction feedback to the cabinet or from feeding back to the utility service.
8. In the event of inverter/charger failure, battery failure or complete battery discharge, the power transfer relay shall revert to the NC (and de-energized) state, where utility line power is connected to the cabinet.

E. User Interface

1. Provide the user with three sets of normally open (NO) and normally closed (NC) single-pole double-throw (SPDT) dry relay contact closures, available on a panel-mounted terminal block, rated at a minimum of 120V/1A, and labeled or marked On Batt.
2. The first set of NO and NC contact closures shall be energized whenever the unit switches to battery power. Contact shall be labeled or marked On Batt.
3. The second set of NO and NC contact closures shall be energized whenever the battery approaches approximately 40% of remaining useful capacity. Contact shall be labeled or marked Low Batt.
4. The third set of NO and NC contact closures shall be energized two hours after the unit switches to battery power. Contact shall be labeled or marked Timer.
5. Relay contact activation shall be annunciated on the front panel via a visual indication. This can be either discrete LED, or part of LCD screen, etc.

F. Network Addressable Capability Requirements

1. Provide Domain Name System (DNS) capability.
2. Support both fixed IP addresses and dynamically assigned IP addresses provided by a DHCP server.
3. Support static management interface IP addressing.
4. The IP-addressable and communication addresses shall be user-programmable.

5. The system processor shall enable a remote user with a standard web browser to gain remote access, collect data, and control and configure the UPS.

G. Remote Monitoring Requirements

1. Provide UPS that supports local and remote monitoring and control via Ethernet port interface.
2. Provide remote environmental sensing hardware and software integrated with SNMP minimally capable of temperature and including generating alarms for low battery, over/under voltage, over/under frequency, and high temperature.
3. Provide an addressable SNMP command set including, at a minimum:
   a. UPS state.
   b. Battery condition (voltage, sampling temperature of one battery).
   c. Current AC input conditions (voltage, frequency).
   d. Current AC output conditions (voltage, AC amps, frequency).
   e. Diagnostic/self-test control and status.

H. Battery System

1. Provide maintenance-free sealed batteries that can be serviced and replaced separately from the UPS.
2. Provide batteries that are rated for extreme temperatures that have been field proven and tested.
3. Provide UPS batteries that maintain 70% of original capacity for a minimum of five years.
4. Provide battery charger with a minimum of three-stage, temperature compensated charging and keeps the batteries above a minimum depth of discharge point of 50% or as recommended by the manufacturer.
5. Provide user-replaceable and hot-swappable battery packs.
6. Provide batteries with non-conductive terminal covers.

I. Cabinet Requirements

1. Provide battery bank(s) that mount on an EIA 19 in. (483 mm) rack using a maximum space of five rack units.
2. Provide inverter/charger unit that can be shelf-mounted or rack-mounted on a standard EIA 19 in rack.
   a. If the inverter/charger is mounted inside the Model 332 Cabinet (Configuration 1), provide a shelf that supports the weight of the unit.
   b. Power transfer relay and manual bypass switch shall be mounted on EIA rail.
   c. Interconnect wiring shall be provided between power transfer relay, bypass switch, and cabinet terminal service block.
3. Interconnect cable requirements
   a. UL Style 1015 CSA TEW
   b. Minimum 10 ft. (3 m) length
   c. Minimum No. 6 AWG, and 133 strands of No. 30 AWG tinned copper
   d. Minimum rating: 600V, 221°F (105°C), PVC insulation
4. Relay contact cable provided for each set of NO/NC relay contact closure terminals requirements
   a. UL Style 1015 CSA TEW
   b. Minimum of 10 ft. (3 m)
   c. Minimum No. 18 AWG wire, and 16 strands of No. 30 AWG tinned copper
   d. Minimum rating: 600V, 221°F (105°C), PVC insulation

5. Wiring
   a. Trim wiring as necessary for installation.
   b. Wire UPS power transfer relay and manual bypass switch as shown in Figure 1 to provide interconnectivity with cabinets for interchangeability between UPS manufacturers.

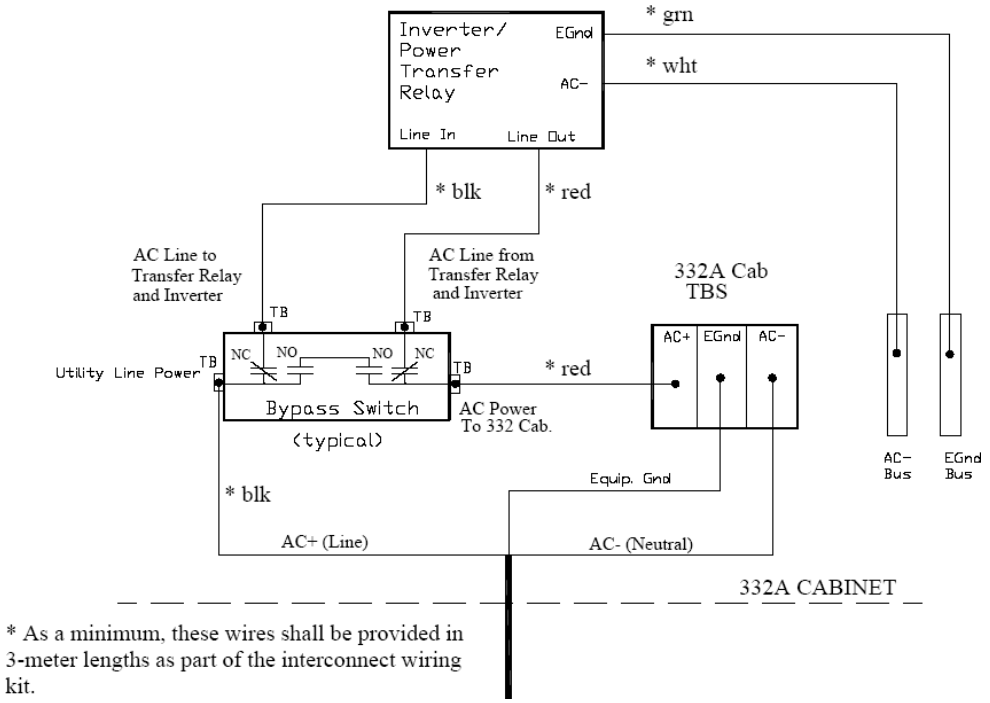

FIGURE 1 – UPS UTILITY POWER CONNECTION DIAGRAM

6. External Cabinet
   a. General
      i. Provide external cabinet that is NEMA 3R rated cabinet conforming to the CalTrans TEES.
      ii. The external cabinet shall be used for housing batteries or UPS, which includes inverter/charger unit, power transfer relay, manually operated bypass switch, other control panels, and wiring harnesses.
      iii. The same inverter/charger, power transfer relay, and manually operated bypass switch that fits inside a 2070 L series cabinet or ATC cabinet shall also fit inside the externally mounted cabinet.
      iv. The external cabinet finish shall be bare aluminum.
   b. Shelf
      i. Provide four shelves.
      ii. Provide a minimum of 12 in. (305 mm) clearance between shelves.
      iii. Provide shelf size of a minimum of 10.38 in. (264 mm) X 25 in. (635 mm).
      iv. Provide shelves that can support a minimum of 125 lb. (57 kg) each.
      v. Provide shelves with edges turned down on all four sides for support and to provide a flat top surface.
      vi. Provide shelves with predrilled holes for EIA rail mounting.
      vii. Provide a vertical passageway for wiring in the rear of the cabinet on both the left and right of the shelves.
      viii. Provide capability of removing the bottom shelf.

c. Rack mounting

i. Two EIA angle rails and all necessary mounting hardware (four sets of 10-32 bolts and nuts with captive washers) shall be provided with the external cabinet (not installed).

ii. Rails shall be symmetric to enable installation on either right or left sides of the cabinet.

iii. Mounting holes and bracket shall enable EIA rail installation at any location in the external cabinet.

iv. The EIA mounting angle nominal thickness shall be either 0.1345 in. (3.4 mm) plated steel or 0.105 in. (2.6 mm) stainless steel.

v. EIA rail mounting bracket shall be of continuous, one-piece design bolted into the cabinet to provide support for rail-mounted equipment.

vi. Pressed in, flush-head threaded screw posts shall be inserted into the front face of the cabinet enclosure top sill.

vii. The threaded posts shall be used to mount both the fan panel and the EIA rail-mounting bracket.

viii. The screw posts shall be #10-32 thread size stud 0.625 in. (16 mm) length.

d. Ventilation

i. The external UPS cabinet shall be ventilated using louvered vents, filter, and a minimum of one thermostatically controlled fan per CalTrans TEES.

ii. The thermostat shall be accessible without removing the UPS controller.

iii. Provide a two-position terminal block on the fan panel, along with 10 ft. (3 m) of connected hookup wire.

e. Cabinet Door

i. The door shall be attached to the cabinet per the CalTrans TEES.

ii. The door shall use a padlock clasp or latch and lock mechanisms as described in the CalTrans TEES, in order to lock the door.

7. Maintenance, Displays, Controls, and Diagnostics

a. Provide display or meter to indicate current battery charge status and conditions.

b. Provide remote monitoring of current battery charge status and conditions.

c. Provide voltmeter standard probe input-jacks (+) and (–) to read the exact battery voltage drop at the inverter input.

d. Provide a 0 to 100% battery capacity LED indicator.

e. Provide lightning surge protection compliant with IEEE/ANSI C.62.41.

f. Provide an integral system to prevent battery from destructive discharge and overcharge.

g. Provide batteries shall be easily replaced with all needed hardware and shall not require special tools for installation.

h. Provide a front-panel event counter display to indicate the number of times the UPS was activated and a front-panel hour meter to display the total number of hours the unit has operated on battery power.

i. Provide meters with the capability of a reset option.

j. Manufacturer shall include a set of equipment lists, operation and maintenance manuals, and board-level schematic and wiring diagrams of the UPS, and the battery data sheets.

k. Manual switch shall conform to the CalTrans TEES.

J. Acceptance

1. The manufacturer, or an independent testing lab hired by the manufacturer, shall perform design qualification testing on the new UPS system and when a major design change has been implemented on an existing design.

2. Each UPS shall be given a minimum of five (5), 4-hour full battery cycle tests during the Operational Test period defined in Section 647.

3. Each system shall be visually inspected for exterior physical damage or assembly anomalies. Defects will be cause for rejection.

925.2.08 Solar Power System Requirements

A. General

1. Solar power systems may be used for flashing beacon type applications including:
   a. RRFB
   b. School Speed Zone Flasher
   c. Beacon on MUTCD warning or regulatory sign.
2. Provide solar power system that can be mounted in a permanent configuration or in a temporary portable type configuration.
3. Provide DC-to-DC and DC-to-AC conversion equipment, as specified herein.

B. Equipment

1. The solar power system shall be comprised of:
   a. Solar Panel
   b. Battery
   c. Charge Controller
   d. Power Inverter
2. Refer to Section 939 for the solar power system specifications.

925.2.09 Prefabricated Controller Cabinet Base Requirements

A. General

1. Provide controller cabinet bases that are precast polymer concrete and grey in color.
2. Provide controller cabinet bases with dimensions as shown in the Standard Details.
3. The prefabricated controller cabinet base shall meet ASTM D 543 Section 7, Procedure 1.
4. Provide a copy of test reports from a certified laboratory along with the materials certification package.

B. Equipment

1. Provide prefabricated controller cabinet base with correct bolt pattern for the cabinet to be installed.
2. Provide prefabricated controller cabinet bases with UNC inserts as shown in the Contract.
3. UNC inserts shall be stainless steel and designed for a minimum of 15 ft.-lb. (20 N-m) of torque.
4. The prefabricated controller cabinet bases shall withstand wind loading of 125 mph. (200 kph.) with the cabinets mounted as shown in the Contract.
5. The prefabricated controller cabinet bases shall withstand a minimum static vertical load of 5,000 lb.
6. (2,262 kg) over a 10 in. (254 mm) by 10 in. (254 mm) by 1 in. (25 mm) thick distribution plate and withstand a tested load of 7,500 lb. (3,394 kg).
7. The prefabricated controller cabinet bases shall withstand a minimum lateral load of 1,800 lb. (814 kg) over an 18 in. (457 mm) by 24 in. (610 mm) by 1 in. (25 mm) steel plate applied to the longest side and withstand a tested load of 2,700 lb. (1,222 kg).
8. The prefabricated controller cabinet base shall withstand a 50 ft.-lb. (67.8 Nm) impact administered with a 12-lb. (5.4 kg) weight having a C tup without puncture or splitting, in accordance with ASTM D 2444.

925.2.10 Rectangular Rapid Flashing Beacon Assembly Requirements

A. General

1. Provide Rectangular Rapid Flashing Beacon Assemblies in the quantities and locations indicated in the contract.
2. Provide all equipment, materials, and work in accordance with manufacturers' recommendations, including mounting, wiring and cabling, power supply, surge suppression, and communications equipment and materials.
3. All provisions of the MUTCD applicable to warning beacons shall be met, except as otherwise provided in this section.
4. RRFB assembly shall consist of the following components: beacons, mounting pole and foundation, wireless subsystem, and solar power subsystem.

B. Equipment

1. Provide a RRFB assembly that meets the criteria MUTCD 11th Edition – Chapter 4L.
2. The Rectangular Rapid Flashing Beacon Assembly consists of the following components and materials:
   a. Rectangular Rapid Flashing Beacon
   b. Solar cell with battery or utility power service
   c. Signs
   d. Wireless subsystem
   e. Push button activation system
   f. Mounting hardware
   g. Configuration and data collection software
   h. Installation and testing
3. Rectangular Rapid Flashing Beacon Assembly shall meet the performance requirements listed below:
   a. Beacon Dimensions and Placement in Sign Assembly
      i. Indications
         a) Face LED indications towards oncoming traffic.
         b) Locate indications between the bottom of the crosswalk warning (S1-1) sign and the top of the supplemental downward diagonal arrow (W16-7p) sign.
   b. Beacon Operation
      i. Uses pedestrian push buttons per Section 937.2 to actuate the Rectangular Rapid Flashing Beacons.
      ii. Powered by:
         a) Solar cells and batteries with automatic battery charging and power control.
         b) Utility power may be used in areas where significant tree or building canopies prevent adequate solar charging.
      iii. Uses wireless communication to avoid trenching.
      iv. Provide a minimum visual distance of 1,000 ft. (305 m) during daytime and nighttime.
   c. Wireless Subsystem
      i. Frequency in the 900 MHz FHSS or 2.4 GHz range.
      ii. Range: minimum 500 ft. (152 m).
   d. Solar Panel Subsystem and Batteries
      i. Provide solar panel output with a minimum 20 W panel or as required by the manufacturer.

ii. Provide batteries that are sealed and maintenance free with a minimum lifespan of 3 years.

iii. Provide batteries that are 12V, 20-40 A-Hr sealed gel, or approved equivalent.

iv. Provide cabinet (if required) that is pole mounted, NEMA 4x rated fiberglass cabinet with locking clasps or powder coated aluminum with tamper-proof hinged door or approved equivalent.

v. Provide solar panel mount for pole mount that includes a 60-degree angle bracket or per manufacturer recommended specifications.

4. Mounting Pole and Foundation

a. Provide a breakaway mounting pole and foundation designed to support the Rectangular Rapid Flashing Beacon and the associated solar panel, batteries, and equipment required to supply a complete Rectangular Rapid Flashing Beacon.

b. Determine pole foundation dimensions based on the local conditions at the locations indicated in the contract.

c. Verify the pole foundation provides a safe and secure mounting of the solar-powered Rectangular Rapid Flashing Beacon Assembly.

925.2.11 Flashing Beacon Assembly Requirements

A. General

This specification is for a flashing beacon cabinet that consists of an aluminum cabinet containing a flasher assembly, field connection terminal block, surge arrestor, and circuit breaker wired in a manner to operate flashing beacons.

B. Equipment

1. Flasher Unit

a. Supply a standard plug-in two circuit NEMA solid state flasher.

b. Provide solid state flasher rated for a minimum of 10 A per circuit.

c. The flasher shall utilize a zero-voltage turn-on, turn-off current, and capable of diming outputs.

2. Surge Arrestor

a. Supply a flasher cabinet that incorporates an AC surge arrestor to protect the internal components from lighting and over voltages on the AC service input.

b. The requirements for the surge arrestor are listed in Table 18.

Table 18 – Surge Arrestor Requirements for Flashing Beacon Cabinet	
Peak Surge Current	20,000A
Peak Surge Voltage @ 20 kA	280V
Clamp Voltage	280V @ 20 kA
Continuous AC Voltage	120VAC RMS
Response Time	<5 ns
Operating Temperature	–40°F to 185°F (–40°C to 85°C)

3. Circuit Breaker

a. Provide circuit breakers in the cabinet.

b. The circuit breaker shall have the following characteristics.

i. Thermal Magnetic 1 pole 120/240 VAC at 50/60 Hz 15A

ii. Interrupting rating of 10 kA at 48 VDC

iii. Wire Size No. 14 to No. 2 AWG

iv. 35 mm. DIN Rail mounting

4. Terminal Block

a. Include a four-position terminal block in the cabinet for making field connections.

b. Label all field terminal connections.

5. Construction

a. Assemble the flasher assembly, terminal block, surge arrestor, and circuit breaker in the cabinet.

b. Wire all components together as a working unit, thus requiring only field connections to and from the AC power and flashing beacons.

925.2.12 Flashing Signal Cabinet for School Speed Zones

A. General

1. This specification is for a flashing signal cabinet consisting of an aluminum cabinet containing:

a. Flasher assembly.

b. Activation device (Time clock, GPS clock or wireless device).

c. Field connection terminal block.

d. Surge arrestor.

e. Circuit breaker.

B. Equipment

1. Supply time clocks that are single circuit, programmable cell modem, solid state, fully self-contained units (CPR2102 (ver4.1 or latest version) or equivalent) that meet the following Specifications:

a. Download Default Week Plan, Alternate Week Plan, Override Plan, Vacation Plan over the cellular network

b. LED indicators on unit indicating:

i. Power

ii. Communication being received

iii. Relay on or off

iv. Week Plan being run

v. Group and location address

c. Power back-up maintains timekeeping and program for more than 6 months

d. Maximum size of 3.7 inches wide, 7.5 inches high and 1.55 inches deep.

e. A programming manual is to be included with each unit.

f. Ability to do program transfer from unit to unit. Include program transfer cable with unit.

g. Ability to run up to twenty (20) different day plans and an unlimited number of annual plans.

h. Include cellular communications modem with the following requirements:

i. LED indicators for power and cellular connection

ii. Ability to be mounted directly to time clock

iii. Powered by time clock with no external power supply required

iv. Time sync via cell system GPS

v. Maximum size of 2.45 inches wide, 3.17 inches high and 1.16 inches deep

925.2.13 Wire and Cable

A. General

All cable and wire from the traffic signal cabinet to all vehicular and pedestrian signal faces, pedestrian push buttons, and inductance loops shall meet IMSA specifications.

B. Equipment

1. All wire used for signal conductors shall be stranded copper.
2. Table 19 provides requirements for wire specification for traffic signal input and output applications.

Table 19 – Signal Cables and Applications

IMSA Cable Specification	Application
19-1 (Various Number of Stranded Conductors)	Traffic Signal Conductors for Vehicular and Pedestrian Signal Faces
51-1, 51-3, and 51-7 (single wire)	In-Pavement Loop Detector Wire
50-2 (3-Twisted Pairs, Shielded)	Signal Loop Detector Lead-in Wire and Pedestrian Push buttons

3. All traffic control device grounding conductors and grounding electrodes shall conform to Section 682.

925.2.14 Signal Module Requirements

A. General

This specification covers Type 1 LED red, green, and yellow modules for vehicle signal faces for both circular and arrow indications.

B. Equipment

1. General
   a. Supply LED Signal Modules that fit in standard incandescent vehicle traffic signal housings and meet the performance specification of ITE Vehicle Traffic Control Signal Heads.
   b. Verify that Type 1 LED signal modules include a LED circuit board with LEDs and required circuit components, 36 in. (900 mm) No. 16 AWG wire leads with strain relief and spade terminals, a rigid housing, and a one-piece neoprene gasket.
   c. Supply Type 1 LED signal modules that are weathertight when mounted in the traffic signal housing.
   d. Submit life data on the LEDs from the LED signal module manufacturer to calculate the expected useful life.
   e. Supply modules with permanent markings of date of manufacture and date of installation.
   f. Verify that the Type 1 LED signal modules utilize the same mounting hardware that is used to secure the incandescent lens and gasket assembly.
2. Optical
   a. Provide test data from an independent laboratory to verify that the performance of the product meets current ITE requirements.
   b. Verify that the individual LEDs are wired such that a catastrophic failure of one LED will result in the loss of not more than 5% of the signal module light output.
   c. The failure of a single LED in a string or cluster of LED's causes loss of light from only that LED, not the entire string or indication.
   d. Provide control circuitry that prevents the current flow through the LEDs in the off state to avoid false indications as may be perceived by the human eye during daytime and nighttime hours.

e. Verify that the LED signal module is operationally compatible with existing or new conflict monitors (Model 208, Model 2018, and ITS Cabinet CMU and AMU)

f. Verify that the LED signal module is operationally compatible with existing or new load switches.

3. Electrical

a. Verify that the power factor is 90% or greater, at nominal rated voltage, at 77ºF (25°C), after 60 minutes of operation.

b. Provide modules that do not exceed the maximum power consumption as shown in Table 20.

Table 20 – Signal Display Module Maximum Power Consumption						
Vehicle Indications	**Red**		**Yellow**		**Green**	
Temperature	77° F (25°C)	165° F (74°C)	77° F (25°C)	165° F (74°C)	77° F (25°C)	165° F (74°C)
12 in. (300 mm) Circular	11 W	17 W	22 W	25 W	15 W	15 W
8 in. (200 mm) Circular	8 W	13 W	13 W	16 W	12 W	12 W
12 in. (300 mm) Arrow	9 W	12 W	10 W	12 W	11 W	11 W
Pedestrian Indications	**Upraised Hand (Portland Orange)**				**Walking Person (White)**	
Temperature	77° F (25° C)	165° F (74°C)			77° F (25° C)	165° F (74°C)
12 in. (300 mm)	10 W	12 W			9 W	12 W

c. Verify that the total harmonic distortion (THD) is less than 20%, at rated voltage, at 77ºF (25°C).

d. Provide LED traffic signal modules that meet FCC noise regulations.

e. Verify that the LED signal modules operate on line voltage, 120 VAC nominal, and can operate over the voltage range of 80 VAC to 135 VAC.

f. Power supply must be integral to the module.

g. Provide transient voltage suppression rated at 1,500 W for 1 ms and fusing with a maximum rating of 2A to minimize the effect and repair cost of an extreme over-voltage situation or other failure mode.

4. Lens

a. Provide lens of the modules that are polymeric and are not frosted and have a surface coating to provide front surface abrasion resistance.

b. Supply lenses that are made of UV stabilized polycarbonate.

c. Provide smooth external lens surface with no raised features, to minimize the collection of dirt, diesel smoke, and other particulate contaminants, and to facilitate periodic cleaning.

d. Provide red and yellow LED modules with tinted lenses are tinted that correspond with the wavelength (chromaticity) of the LED.

e. Provide green modules with clear (transparent) lenses.

5. Light Output

a. Provide ability to reduce light output in response to an input from the traffic signal controller.

b. Verify the minimum light output when dimmed is not less than 30% of the minimum maintained luminous intensity as defined in the applicable traffic signal face module.

6. Circular Signal Modules
   a. Before delivery of modules, supply certification that module follows these specifications.
   b. Supply substantiating documentation from an independent test laboratory to show the product has passed design qualification testing in accordance with Section 6.4 of the ITE Vehicle Traffic Control Signal Heads: LED Circular Signal Supplement.
   c. Verify the report includes a Minimum Maintained Luminous Intensity chart for the module uses the same horizontal and vertical angles as shown in Table 1 of the ITE Vehicle Traffic Control Signal Indications: LED Circular Signal Supplement.
   d. Provide modules with a signed copy of the production, test, and inspection as detailed in Section 6.3 of the ITE Vehicle Traffic Control Signal Indications: LED Circular Signal Supplement.
   e. Verify that Circular Signal Modules have prominent and permanent markings to designate the orientation of the signal module in the traffic signal housing. The marking should be an up arrow or the word UP or TOP.
   f. Verify Circular Signal Module meets the photometric requirements as indicated and described in the ITE Vehicle Traffic Control Signal Indications: LED Circular Signal Supplement.
   g. Supply red and yellow LEDs that utilize AlInGap technology, either AS (Absorbing Substrate) or TS (Transparent Substrate) and do not exhibit degradation of more than 30% of their initial light intensity following accelerated life testing (operating at 185°F [85°C] and 85% humidity, for 1,000 hours). AlGaAs technology is not acceptable.
   h. Supply green LEDs that utilize gallium nitride technology.
7. Vehicle Arrow Signal Modules
   a. Provide Arrow Signal Modules that are omni-directional and marked as omni-directional so that they may be rotated at any angle.
   b. Before delivery of modules, supply certification that module follows these specifications.
   c. Supply substantiating documentation from an independent test laboratory to show the product has passed design qualification testing in accordance with Section 6.4 of the ITE Vehicle Traffic Control Signal Indications: LED Circular Signal Modules Supplement.
   d. Verify the report includes a Minimum Maintained Luminous Intensity chart for the module if uses the same horizontal and vertical angles as shown in Table 1 of the ITE Vehicle Traffic Control Signal Indications: LED Vehicle Arrow Traffic Signal Modules Supplement.
   e. Provide modules with a signed copy of the production and test and inspection as detailed in Section 6.3 of the ITE Vehicle Traffic Control Signal Indications: LED Vehicle Arrow Traffic Signal Supplement.
   f. Supply red and yellow LEDs that utilize AlInGap technology, either AS (Absorbing Substrate) or TS (Transparent Substrate) and do not exhibit degradation of more than 30% of their initial light intensity following accelerated life testing (operating at 185°F (85°C) and 85% humidity, for 1,000 hours). AlGaAs technology is not acceptable.
   g. Supply green LEDs that utilize gallium nitride technology.
   h. Bi-modal traffic signal faces shall meet the standards for both yellow and green LED arrows.
   i. Supply LED Arrow Signal Modules that fit in standard incandescent vehicle traffic signal housings and meet the ITE Vehicle Traffic Control Traffic Signal Faces Part 3: LED Vehicle Traffic Signal Modules.
   j. Verify the LED arrow modules meet the required luminous intensity as shown in Table 21.

Table 21 – Minimum Maintained Luminous Intensity Values for Arrow LED Indications									
Angle		12 in. (300 mm)			Angle		12 in. (300 mm)		
Vert	Horiz				Vert	Horiz			
+	±	Red	Yellow	Green	-	±	Red	Yellow	Green
2.5	**2.5**	56.8	141.6	73.9	**2.5**	**2.5**	56.8	141.6	73.9
	7.5	47	117.1	61.1		**7.5**	47	117.1	61.1
	12.5	32.1	80.1	41.8		**12.5**	32.1	80.1	41.8
	17.5	18.2	45.3	23.7		**17.5**	18.2	45.3	23.7
	22.5	8.5	21.2	11.1		**22.5**	8.5	21.2	11.1
	27.5	3.3	8.2	4.3		**27.5**	3.3	8.2	4.3
7.5	**2.5**	47	117.1	61.1	**7.5**	**2.5**	47	117.1	61.1
	7.5	38.9	97	50.6		**7.5**	38.9	97	50.6
	12.5	26.7	66.5	34.7		**12.5**	26.7	66.5	34.7
	17.5	15.1	37.7	19.7		**17.5**	15.1	37.7	19.7
	22.5	7.1	17.7	9.2		**22.5**	7.1	17.7	9.2
	27.5	2.8	6.9	3.6		**27.5**	2.8	6.9	3.6
12.5	**2.5**	32.1	80.1	41.8	**12.5**	**2.5**	32.1	80.1	41.8
	7.5	26.7	66.5	34.7		**7.5**	26.7	66.5	34.7
	12.5	18.3	45.7	23.9		**12.5**	18.3	45.7	23.9
	17.5	10.5	26.1	13.6		**17.5**	10.5	26.1	13.6
	22.5	5.0	12.4	6.4		**22.5**	5.0	12.4	6.4
	27.5	-	-	-		**27.5**	-	-	-
17.5	**2.5**	18.2	45.3	23.7	**17.5**	**2.5**	18.2	45.3	23.7
	7.5	15.1	37.7	19.7		**7.5**	15.1	37.7	19.7
	12.5	10.5	26.1	13.6		**12.5**	10.5	26.1	13.6
	17.5	6.0	15.0	7.8		**17.5**	6.0	15.0	7.8
	22.5	2.9	7.2	3.8		**22.5**	2.9	7.2	3.8
	27.5	-	-	-		**27.5**	-	-	-
22.5	**2.5**	8.5	21.2	11.1	**22.5**	**2.5**	8.5	21.2	11.1
	7.5	7.1	17.7	9.2		**7.5**	7.1	17.7	9.2
	12.5	5.0	12.4	6.4		**12.5**	5.0	12.4	6.4

Table 21 – Minimum Maintained Luminous Intensity Values for Arrow LED Indications									
Angle		12 in. (300 mm)			Angle		12 in. (300 mm)		
Vert	Horiz				Vert	Horiz			
+	±	Red	Yellow	Green	-	±	Red	Yellow	Green
	17.5	2.9	7.2	2.8		**17.5**	2.9	7.2	2.8
	22.5	-	-	-		**22.5**	-	-	-
	27.5	-	-	-		**27.5**	-	-	-
27.5	**2.5**	3.3	8.2	4.3	**27.5**	**2.5**	3.3	8.2	4.3
	7.5	2.8	6.9	3.6		**7.5**	2.8	6.9	3.6
	12.5	-	-	-		**12.5**	-	-	-
	17.5	-	-	-		**17.5**	-	-	-
	22.5	-	-	-		**22.5**	-	-	-
	27.5	-	-	-		**27.5**	-	-	-

925.2.15 LED Pedestrian and Countdown Signal Module Requirements

A. General

1. Provide LED traffic signal modules designed as a retrofit replacement for the message bearing surface of nominal 16 in. x 18 in. (400 mm x 450 mm) traffic signal housing built to the PTSCI Standard.
2. The message bearing surface of the module consists of an overlapping UPRAISED HAND and WALKING PERSON symbols with a numerical display of numbers from 00 to 99.
3. Verify that the pedestrian indications for the UPRAISED HAND and WALKING PERSON are filled in to provide a solid indication. Do not supply outlines or hollow pedestrian indications for the UPRAISED HAND and WALKING PERSON.

B. Equipment

1. General
   a. Verify that the message numbers 00 to 99 are a minimum of 9 in. (228 mm) in height and consist of two rows of LEDs.
   b. Verify the module fits in the pedestrian signal housing without modification to the housing and requires no special tools for installation.
   c. Supply LED signal modules that are weathertight when mounted in the traffic signal housing.
   d. Supply life data from the LED Signal Module manufacturer to calculate the expected useful life.
   e. Supply modules with permanent markings of the date of manufacture and date of installation.
   f. Verify that Pedestrian Signal Modules have prominent and permanent markings to designate the orientation of the signal module in the pedestrian signal housing. The marking shall be an up arrow or the word UP or TOP.
2. Optical
   a. Provide test data from an independent laboratory to verify that the performance of the product meets current ITE requirements.

b. Supply Portland Orange LEDs that utilize AlInGap technology, either AS (Absorbing Substrate) or TS (Transparent Substrate) and do not exhibit degradation of more than 30% of their initial light intensity following accelerated life testing (operating at 185°F [85°C] and 85% humidity, for 1,000 hours). AlGaAs technology is not acceptable.

c. Verify that the individual LEDs are wired such that a catastrophic failure of one LED will result in the loss of not more than 5% of the signal module light output.

d. The failure of a single LED in a string causes loss of light from only that LED, not the entire string or indication.

e. Provide control circuitry that prevents the current flow through the LEDs in the off state to avoid false indications as may be perceived by the human eye during daytime and nighttime hours.

f. Verify that the LED signal module is operationally compatible with existing or new conflict monitors (Model 208, Model 2010, Model 2018, ITS Cabinet CMU and AMU).

g. Verify that the LED Signal Module is operationally compatible with existing or new load switches.

h. Verify that the intensity of the LED signal module does not vary by more than 10% over the voltage range as specified in Table 21.

i. Verify that the LED signal modules maintain not less than 90% of the required intensity, as defined by the ITE intensity standards for LED traffic signal modules.

j. Verify that each module provides an average luminosity of at least 3,750 candela per square meter of lighting surface for the UPRAISED HAND and 5,300 candela per square meter for the WALKING PERSON symbol.

k. Verify over the temperature range of –40ºF to 165ºF (–40°C to +74°C) at 120 VAC when new and after 4 years of field installation.

l. Provide an exterior lens that is uniform and frosted to reduce sun phantom effect.

3. Electrical

a. Verify that the power factor is 90% or greater, at nominal rated voltage, at 77ºF (25°C), after 60 minutes of operation.

b. Verify that the THD is less than 20% at rated voltage, at 77ºF (25°C) and that all LED traffic signal modules follow FCC noise regulations.

c. Verify that the LED signal modules operate on line voltage, 120 VAC nominal, and can operate over the voltage range of 80 VAC to 135 VAC.

d. Provide transient voltage suppression rated at 1,500 W for 1 ms and fusing with a maximum rating of 2 A to minimize the effect and repair cost of an extreme over-voltage situation or other failure mode.

e. Verify the modules enable a reduction of the intensity of the light output in response to an input from the traffic signal controller.

f. Verify the minimum light output when dimmed is not less than 30% of the minimum maintained luminous intensity as defined in the applicable ITE Traffic Signal Face Module.

4. Operation

a. Supply LED modules that start counting when the flashing UPRAISED HAND indication starts and will countdown to 0 when the steady UPRAISED HAND signal turns on.

b. Verify that the countdown numbers remain continuously illuminated through the flashing UPRAISED HAND interval.

c. Verify that the unit maintains a consistent countdown during a short power failure (i.e., traffic controller does not restart).

d. Verify that if traffic controller restarts that the countdown timer display is turned off until one full pedestrian clearance cycle is timed.

e. Verify that the unit will turn off the counter if the steady UPRAISED HAND display starts while the countdown timer is displaying a number other than 00.

925.2.16 Not Applicable

A. Not Applicable

925.2.17 Vehicle Traffic Signal Face Requirements

A. General

1. Supply vehicle traffic signal faces that are 12 in. (305 mm) in diameter for traffic signal control applications.
2. Verify that 12 in. (305 mm) polycarbonate vehicle traffic signal faces meet the current ITE Vehicle Traffic Control Traffic Signal Faces specification with the following modifications or clarifications:
   a. Unless otherwise approved by the Department or noted in the Contract, supply traffic signal faces with the following exterior color scheme:
   b. Front face, including doors and visors, flat black with Highway Yellow signal housing (back).
   c. All flat black face, doors, visors, and signal housing.
   d. Provide housing and housing door that are one-piece injection-molded UV and heat-stabilized polycarbonate resin with the color impregnated in the material.
3. Provide the vehicle signal LED in all sections either circular or arrow modules per the Contract.
4. Provide a weathertight seal with the LED module.
5. Provide traffic signal faces that provide a positive method of holding the lens preventing rotation.
6. Lens clips that do not apply firm pressure to the lens gasket to avoid rotation are not acceptable.

B. Traffic Signal Face Visor Requirements

1. Typically, visors are one-piece tunnel type and removable unless specified otherwise in the Contract.
2. Unless otherwise specified by the Department, provide black traffic signal face visors.
3. Verify that visors are polycarbonate and at least 9 in. (225 mm) deep for 12 in. (305 mm) heads.
4. Special angle visors are full circle with the long side at least 18 in. (450 mm) deep.
5. Verify that visors provide a positive method of attaching to the door of the traffic signal face and do not enable rotation. An acceptable method is to provide tabs that use stainless steel screws.

C. Universal Closure Kit Requirements

1. Supply a universal signal closure kit to seal the traffic signal face at either the top or bottom.
2. Verify that the kit will fit any manufacturer's traffic signal face (top or bottom) without the use of special tools or modification.
3. Verify that the gasket is 60-70 durometer neoprene.
4. Verify that the closure cap is injection molded ABS plastic.
5. The plastic is to be loaded with UV stabilizers.
6. Verify that the adapter bar is made so that it will secure the closure cap and compensate for varying thickness of traffic signal faces.
7. Provide two #10 (9 mm) screws to fit any manufacturer's traffic signal face. Verify that one screw is 0.75 in. (19 mm) in length and the second screw is 1 in. (25 mm) in length.
8. Pack each assembly in a clear plastic bag. Mark the bag with the manufacturer's name and part number.
9. Include the universal signal closure kit in a package containing the span wire clamp and Tri-Stud wire entrance fitting.
10. Verify that the closure cap is molded to closely match the color of the traffic signal face (highway yellow).
11. The adapter bar and screws are to be zinc plated steel.

Traffic Signal Face Backplate Requirements

1. Provide backplate that is designed to shield a traffic signal face from background distractions.
2. Provide backplate with louvers.
3. Fabricate the backplates from UV stabilized polycarbonate, ABS plastic, or aluminum material.
4. Thickness
   a. Polycarbonate backplates minimum of 0.15 in. (4 mm) thick.
   b. ABS backplates minimum of 0.05 in. (1 mm) thick.
   c. Aluminum backplates minimum of 0.06 in. (1.5 mm) thick.
5. Color
   a. Provide backplate constructed with a finished color of flat black.
   b. Aluminum backplates should be finished with a durable, flat black colored powder coat.
6. Perimeter
   a. Design the backplates to extend beyond the traffic signal face to a minimum of 4 in. (100 mm) and a maximum of 6 in. (150 mm) on all sides and have all corners rounded with minimum 2 in. (50 mm) radii.
   b. To provide a rectangular appearance at night, apply 2 in. (50 mm) yellow fluorescent TP IX retroreflective strip along the backplate perimeter.
7. Mounting
   a. Design the backplates with predrilled holes to provide for simple attachment to the specified brand, size, and configuration of traffic signal face with all mounting hardware included.
   b. Verify that the backplates do not interfere with the signal mounting hardware.

D. Hardware for Mast Arm Mounting Requirements

1. Verify that traffic signal faces are rigidly mounted to the mast arm.
2. Fabrication
   a. All aluminum parts shall have a chromate finish.
   b. All steel parts shall have a galvanized finish.
   c. This item will be approved upon submittal of catalog cuts.
   d. Refer to Standard Detail Drawings for additional information.
3. Provide mounting hardware that is in accordance with the following:
   a. Adjustability
      i. Provide rotational adjustment about the bracket axis.
      ii. Provide vertical adjustment.
      iii. Provide rotational adjustment about the mast arm.
      iv. Provide rotational adjustment from the vertical plane.
   b. Attachment
      i. Verify the bracket is provided with aircraft-grade galvanized steel cables with stainless steel fastening hardware and make a minimum of two wraps around to fasten the bracket to the arm.
      ii. Verify the bracket is easily adjustable to fit all sizes of round, elliptical, or other shaped structure without special tools or equipment.
   c. Signal/Sign Accommodations
      i. Verify the bracket attaches to the signal or sign to ensure maximum rigidity.

ii. When clamping the signal top and bottom, verify a standard bracket accommodates all major signal manufacturer's signal for three, four, and five section traffic signal face configurations.

d. Wiring

i. All electrical wiring shall be completely concealed with the bracket.

ii. The vertical support shall be a gusseted C-shaped extruded aluminum tube to accommodate the signal cable regardless of vertical positioning of the tube.

e. Materials

i. The upper and lower arms shall be cast 319 aluminum or equivalent.

ii. The lower arm shall be internally threaded to accommodate the threaded vertical support tube.

iii. Verify the lower arm is furnished with plastic covers that slide and snap into place.

iv. Both arms shall have 72 tooth serrations cast into the arm to ensure a positive lock with signal housing and shall be secured about their rotational axis with sets crews.

v. Verify the arms have a tri-bolt arrangement for attachment to the signal housing.

4. Provide gusseted tube vertical support that is extruded from 6063-T6 aluminum.
5. Verify the tube includes a vinyl closure strip.
6. Verify the mast arm clamp assembly is cast from 713 aluminum alloy or equivalent.
7. Provide an assembly that enables 360 degrees of rotation with no internal bracing obstructing the center opening.
8. Provide two aircraft-grade galvanized steel cables that have minimum tensile strength of 100,000 psi (690 mPa).
9. Verify that each bracket is complete with necessary bolt, washers, gaskets, and miscellaneous items to enable assembly of the signal to the bracket and the bracket to the mast arm.

E. Traffic Signal Face Louver Requirements

1. Verify that the units can be installed and programmed in accordance with the manufacturer's instruction on visors that are recommended by the manufacturer.
2. Have the programmable louver display approved by the Department prior to placing the signal in stop and go operation.
3. If special tools are required for louver adjustment, provide one set per project to the District Signal Manager.
4. If special tools are required for visor adjustment, provide one set per project.
5. Coordinate delivery of tools with the District Signal Manager.
6. Verify that louvers (with the vanes oriented vertically) are directional with a 7-degree cutoff right of center.
7. Rotating the louver 180 degrees will produce a 7-degree cutoff left of center.
8. Provide 12 in. (300 mm) louvers with 5 vanes.
9. Finish all louvered surfaces in flat black.
10. Verify that programmable louvers are directional with a 7-degree cutoff and that all louver surfaces have a flat black finish.

F. Hardware for Traffic Signal Face Pole Mounting Requirements

1. Verify this item consists of hardware adequate for the specific mounting.
2. Verify that this item consists of hardware as shown in the standard details.
3. This item will be approved upon submittal of catalog cuts.
4. At a minimum provide the following hardware: 1.5 in. (38 mm) pipe nipples of die cast aluminum that are a minimum of 12 in. (305 mm) and threaded with 1.5 in. (38 mm) NPS threads on either end.
5. On the upper and lower arm there shall be a serrated 72 tooth boss with set screw.

6. Use a tri-stud adaptor to attach the signal housing to the mounting hardware.
7. The upper arm shall have a neoprene gasket to provide weathertight fit.
8. Provide hub plates for pole mounting that are appropriate for the mounting (round or flat).
9. Hardware shall die cast aluminum alloy 380 or extruded.
10. All die cast parts shall be cleaned in an alkaline cleaning compound.
11. Extruded parts shall have a chromate conversion coating to provide proper base for paint adhesion.
12. The assembly shall be coated with two coats of oven baked enamel in addition to the primer coat.
13. All other hardware shall be stainless steel.

925.2.18 Optically Programmed Traffic Signal Face Requirements

A. General

1. Supply traffic signal faces that permit the visibility zone for the red, yellow and green indications to be determined optically and require no hoods or louvers. The projected indication may be selectively visible or veiled anywhere within 15 degrees of the optical axis.
2. Verify that the projected indication conforms to ITE transmittance and chromaticity standards.
3. Verify no indication results from external illumination and that one light unit does not illuminate a second. The components of the optical system include the lamp, lamp collar, optical limiter-diffuser, and objective lens.
4. Verify that the optical system accommodates projection of diverse selected indications to separate portions of the roadway such that only one indication will be simultaneously apparent to any viewer.

B. Equipment

1. Fabrication
   a. Provide an LED lamp module that is a direct replacement for the incandescent lamp.
   b. Verify the lamp modules are on the CalTrans QPL for LED programmed visibility modules.
   c. Provide unit that operates over the voltage range of 80 to 135 VAC.
   d. Verify the unit provides a minimum luminous intensity of 500 candela and does not exceed 18 W at 25°C (77°F).
   e. Couple the lamp to the diffusing element with a collar including a specular inner surface. The diffusing element may be discrete or integral with the convex surface of the optical limiter.
   f. Supply an optical limiter with an accessible imaging surface at focus on the optical axis for objects 900 to 1,200 ft. (270 to 360 m) distance and permit an effective veiling mask to be variously applied as determined by the desired visibility zone.
   g. Provide optical limiter with positive indexing means and composed of heat-resistant glass.
   h. Verify that the objective lens is a high-resolution, planar incremental lens hermetically sealed within a flat laminate of weather resistant acrylic or approved equal.
   i. Supply a lens that is symmetrical in outline and that may be rotated to 90-degree orientation about the optical axis without displacing the primary image.
2. Mounting
   a. Supply signals that mount to standard 1.5 in. (38 mm) fittings as a single section, as a multiple section face, or in combination with other signals.
   b. Provide signal sections with an adjustable connection that permits incremental tilting from 0 to 10 degrees above or below the horizontal while maintaining a common vertical axis through couplers and mounting.
   c. Verify that terminal connections permit external adjustment about the mounting axis in 5-degree increments.
   d. Verify that the signal is mountable with ordinary tools and capable of being serviced with no tools.

e. Supply attachments such as backplates or adapters that conform and readily fasten to existing mounting surfaces without affecting water and light integrity of the signal.

f. Supply traffic signal faces with tri-studs for mounting.

3. Electrical

a. Supply lamp fixtures that comprise a separately accessible housing and integral lamp support indexed ceramic socket and self-aligning, quick release lamp retainer.

b. Verify that electrical connection between case and lamp housing can be accomplished with an interlock assembly that disconnects lamp holder when opened.

c. Include a covered terminal block for clip or screw attachment of lead wires for each signal section.

d. Use concealed No. 18 AWG, stranded and coded wires to interconnect all sections to permit field connection within any section.

4. Photo Controls

a. Verify that each signal includes integral means for regulating its intensity between limits as a function of the individual background illumination.

b. Verify that lamp intensity is not less than 97% of uncontrolled intensity at 10,750 lux and reduces to 15%

c. +/-2% of maximum at less than 10,750 lux.

d. Verify that response is proportional and essentially instantaneous to detectable increase of illumination from darkness to 10,750 lux and damped for a decrease from 10,750 lux.

e. Verify that the intensity controller is comprised of an integrated, directional light sensing and regulating device interposed between lamp and line wires.

f. Verify that intensity controller is compatible with 60 Hz input and responsive within the range 105 to 135 VAC.

g. Output may be phase controlled but verify that the device provides nominal terminal impedance of 1,200 W open circuit and a corresponding holding current.

925.2.19 Blank-Out Sign Requirements

A. General

1. Provide sign with a clearly visible and definable legend at a distance of 500 ft. (152 m).

2. Provide hardware to mount the sign on standard 1.5 in. (38 mm) pipe brackets or to mount directly to signal mast arms or span wire or as outlined in the contract.

3. Supply blank-out signs capable of displaying one message at a time in one direction.

B. Equipment

1. Sign Enclosure

a. Use a case formed from aluminum extrusion F1-6-E and a special aluminum door frame angle.

b. For Alloy 6063-T5, verify that the wall is at least 0.075 in. (2 mm) thick and the corners and joints are at least 0.080 in. (2 mm) thick.

c. Use filler arc for all welding.

d. Verify all hinges and fastening hardware, nuts, bolts, fasteners on the housing, and internal components are stainless steel.

e. Use a BR-type take-apart door hinge and draw bolt.

f. Furnish one P-15 1.5 in. (38 mm) hub on the top surface and bottom if mounted to a mast arm.

g. Prime the entire case with zinc chromate, bake the inside with two coats of non-yellowing white, and paint the outside with two coats of highway yellow or flat black as specified in the Contract.

2. Electrical
   a. Verify that all blank-out signs are LED and conform to current ITE standards.
   b. Supply all signs with the necessary mounting hardware to provide for mounting as shown in the contract.
   c. Provide mounting for one-way or two-way configurations.
   d. Obtain approval for messages and letter dimensions from the Department.
3. Sun Phantom Screen
   a. Attach to each sign a heavy-duty aluminum louver-type sun phantom screen covering the entire sign face.
   b. Slant the louvers down enough to eliminate the sun glare without obstructing the view of the sign face.
4. Painting
   a. Paint the signal surfaces, inside and out, with two coats of oven-baked enamel in addition to the primer coat.
   b. Paint the non-illuminated portions of the signal face black.
   c. Paint the housings, brackets, fittings, etc., highway yellow.
5. Lens
   a. Use a fabricated, three-section Plexiglas lens clear face, with or without legend, that can accept a silk-screened legend on the first surface.
   b. Provide a thickness of at least 0.31 in. (8 mm).

925.2.20 Lane-Use Control Signal Requirements

A. General

1. Verify that all lane-use control signals are LED and conform to current ITE publication Traffic Control Signal Indicators-Light Emitting Diode (LED) Signal Modules.
2. Supply all lane-use control signals with the necessary mounting hardware to provide for mounting as shown in the contract.
3. Provide mounting for one-way or two-way configurations.

B. Equipment

1. Weight
   a. Provide one-way lane-use control units that do not exceed 50 lb. (23 kg).
   b. Provide two-way lane-use control units that do not exceed 60 lb. (27 kg).
2. Color
   a. Verify that the color of lane-use control signal indications is always visible for 0.25 mile (0.38 km) under bright sunny conditions.
   b. Provide lane-use control signals with a visibility angle of a minimum of 60 degrees.
3. Housing
   a. Verify that the housing of each signal is polycarbonate or a one-piece corrosion-resistant aluminum alloy die casting or equal and meets current related ASTM specifications.
   b. Verify that all configurations are balanced to provide a plumb hanging unit.
   c. Verify that all components are readily and easily accessible from the open door.
4. Housing Door
   a. Verify that the housing door is one-piece corrosion-resistant aluminum or polycarbonate and meets current related ASTM specifications.
   b. Provide two substantial door hinges with stainless steel hinge pins.

c. Verify hinges are on the left side of each section with a latch boss on the right side.

d. Provide stainless steel dual eye bolt latches or similar approved devices to securely close and latch the housing door.

e. Equip the housing or door with a continuous molded neoprene gasket to make the interior of the unit dustproof and weathertight.

5. Wiring

a. Provide each signal housing with a complete terminal board.

b. Verify that one side of the terminal strip accommodates socket leads and the other side accommodates field wires.

c. Verify that the terminal board provides separate wiring of each symbol.

d. Verify each lamp is separately wired to a terminal block located in each housing.

e. Provide each lamp holder socket with color-coded leads.

f. For combination symbols, color-code socket leads separately to distinguish between red X, yellow X, or downward arrow symbols.

g. Provide leads that are No. 14 AWG type THW, 600 VAC, and fixture wire with 194ºF (90°C) thermoplastic insulation.

6. Visors

a. Provide visors not less than 12 in. (305 mm) long for multiple unit and 7 in. (175 mm) long for single unit signals for each signal face.

b. Verify that the visors are constructed of sheet aluminum or polycarbonate and encompass the top and sides of each section.

7. Painting

a. Paint all signal surfaces, inside and out, with two coats of oven baked enamel in addition to the primer coat.

b. Paint the insides of the visors flat black.

c. The non-illuminated portions of the signal face black or dark gray and all housings, brackets, and fittings highway yellow.

8. Hardware and Fittings

a. Supply all necessary fittings, pipe brackets, hangers, hubs, etc., for the type of mounting specified.

b. Verify all fittings are aluminum or galvanized coated to prevent rust and corrosion.

9. Sun Phantom Screen

a. Provide each signal face with a screen that substantially counteracts the sun phantom effect.

10. Signal Display

a. Verify that the symbols, which are on an opaque black or dark gray background, meet ITE requirements and are blacked out when not illuminated.

11. LED Optical System

a. Verify that each separate color indication in a sign face is illuminated by independent LEDs.

b. Verify that the green arrow indication does not utilize the same termination points as the X indication.

c. Verify that total power required for single indication does not exceed 250 W.

d. Verify that all modules are contained behind a weathertight signal face or lens assembly.

e. Verify that the entire optical system is weathertight and is not vulnerable to extremes in temperature or moisture

925.2.21 Pedestrian Traffic Signal Face Requirements

A. General

1. The illumination, the UPRAISED HAND, and WALKING PERSON shall meet the color, luminosity, dimensions and other specifications in the ITE publication Pedestrian Traffic Control Signal Indicators-Light Emitting Diode (LED) Signal Modules.
2. Provide each section with a visor encompassing the top and sides of the signal face of a size and shape to shield the lens from external lighted sources. An acceptable option is a Z-crate or louver type visor for mounting over the pedestrian signal face.
3. Verify that pedestrian indications are distinguishable to the pedestrian both day and night and at all distances from 10 ft. (3 m.) to the full width of the areas to be crossed.
4. Use only internal illumination.
5. Verify that an opaque material obscures all areas of the face or lens, except for the message.
6. Verify that when not illuminated, the symbols are not to be distinguishable by pedestrians at the far end of the crosswalk they control.

B. Equipment

1. Fabricate the housing of one-piece cast aluminum alloy with two integrated hinge lugs, screw slots, and openings at each end.
2. Fabricate the door of one-piece cast aluminum alloy with two hinge lugs cast on top of the door and two latch points cast on the bottom.
3. Provide hinge pins of stainless steel to attach the door to the housing and two eye bolts and wing nuts on the other side of the door.
4. Provide door with a neoprene gasket creating a weathertight, dustproof seal when closed.
5. Supply pedestrian traffic signal faces with a black face and a yellow body, unless otherwise specified in the contract.

C. Pedestal Pole Requirements

1. Furnish pedestal poles according to type and overall length shown in the Contract.
2. Poles are made of one continuous piece of bare finish spun aluminum from top to base connection for the entire height of the pole.
3. Pedestal pole mounting adapter shall rigidly attach to the sign case's structural bracing.
4. Cable entrance to the sign case shall be through the inside of the pole.
5. The shaft, of appropriate shape, may or may not be uniformly tapered from butt to tip.
6. A pole used to support only a traffic signal may be tapered.
7. Fabricate pole caps, when required, of cast material, and secure in place with set screws.

D. Pedestal Pole Base Requirements

1. Verify that the base meets current AASHTO breakaway requirements.
2. Provide test reports from an FHWA approved independent laboratory certifying that the base has been tested and meets applicable requirements.
3. Supply a statement of certification from the FHWA stating such tests have been accepted and approved.
4. In order to prove structural soundness, provide certification from a recognized independent structural laboratory that the base will withstand a bending moment of 10,750 ft.-lb. (14,575 N-m).
5. Verify that all design radii are smooth and intact.

6. Verify that the exterior surface finish is smooth and cosmetically acceptable by being free of molding fins, cracks, and other exterior blemishes.
7. Fabricate from new aluminum ingot.
8. Minimum requirements are provided in Table 22.

Table 22 – Minimum Material Requirements for Pedestrian Pole Bases	
Aluminum Alloy No.	319
Elongation [% In 2 in. (50 mm)]	2.5
Tensile Strength, KSI (MPa)	34 (234)
Brinell Hardness	85
Yield Strength, KSI (MPa)	19 (131)
Shear Strength, KSI (MPa)	232 (1600)

9. Verify this item consists of square cast aluminum with bare finish and has a minimum weight of 21 lb. (9.5 kg).
10. Thread the upper end to receive a 4 in. (100 mm) National Pipe Thread (NPT) pipe shaft.
11. Design the base so that it may be fastened to a foundation with four 0.75 in. (19 mm) anchor bolts located 90 degrees apart on the bottom of the base.
12. Provide slots in the bottom of the base 1.5 in. (38 mm) wide and 2.5 in. (63 mm) long measured along the circumference of the bolt circle, enabling a proper fit even if the bolts are placed slightly off center.
13. Design the base to accommodate bolt circles of a minimum of 12 in. (305 mm) through a maximum of 14.5 in. (363 mm) and anchor bolts with a minimum of 0.63 in. (16 mm) through 1.0 in. (25 mm) diameter.
14. Provide a plastic door that meets the following requirements:
    a. Attach the door to the base using one socket button head screw to prevent unauthorized entry.
    b. Verify that the door opening is free of burrs and sharp edges and is no less than 8.5 in. (213 mm) square.
    c. Verify that the door is injection molded from ABS plastic to deter vandalism and theft, and has the following properties provided in Table 23.

Table 23 – Minimum ABS Plastic Requirements		
TEST	ASTM METHOD	VALUE
Tensile @ Yield [0.13 in. (3 mm)]	D638	6,600 psi (45,500 kPa)
Flexural @ Yield	D790	11,000 psi (75,850 kPa)
Rockwell Hardness	D785	101 (R Scale)
Notched Izod	D256	5 ft.-lb./in. (0.03 N-m/mm)

15. Verify that the door exhibits the following properties:
    a. Has an edge thickness of 0.25 in. (6 mm) and a minimum thickness of 0.156 in. (4 mm).
    b. Contains flame-retardant material, meeting or exceeding UL 94 test H.B.
    c. Bare aluminum tone, unless otherwise specified.
    d. Contains UV inhibitors and stabilizers for protection against UV degradation.
    e. Is injection molded with a smooth front finish.

f. Has flat and straight surfaces without blisters, buckling, or warping.

g. Has reinforcing ribs.

h. Contains two injection molded lugs on the bottom of the door with slots of the proper width and depth to fit the base door opening.

16. Supply the base with a set of four anchor bolts, 0.75 in. (19 mm) diameter by 18 in. (450 mm) in length, with material per ASTM 572 and galvanized per ASTM 153.

17. Supply one hex nut and one flat washer with each bolt.

E. Pedestal Pole Foundation Anchor Assembly Requirements

1. Provide baseplate that is steel and conforms to ASTM A 36 material.
2. Provide pipe with helical blade that is manufactured from ASTM A-53 ERW Grade B Steel.
3. Provide foundation anchor assembly that is 4 in. (100 mm) in diameter by 56 in. (1,400 mm) with a single helical blade and a square fixed baseplate with combination underside holt-head retainer and dirt scrappers enabling flush-mount with the ground.
4. Verify 4 in. (100 mm) pipe has 2 in. (50 mm) by 3 in. (75 mm) entrance hole 18 in. (450 mm) below the steel plate.
5. Verify the anchor assembly is hot dipped galvanized finish after fabrication and complies with ASTM A 123.
6. Verify baseplate has four slotted mounting holes to fit bolt circles from 7.75 in. (195 mm) to 14.75 in. (375 mm).
7. Provide four slotted mounting holes with a 0.75 in. (20 mm) keyhole slot to permit bolt installation and replacement from the top surface without digging under the baseplate.
8. Verify assembly is furnished with:
9. Four 0.75 in. (20 mm) -10NC x 3 in. (75 mm) square head galvanized ASTM A 325 anchor bolts
10. Four 0.75 in. (20 mm) plain flat galvanized washers
11. Four 0.1875 in. (5 mm) thick galvanized plate washers
12. Four 0.75 in. (20 mm) galvanized hex nuts

925.2.22 Messenger and Guy Strand (Span Wire) Requirements

A. General

1. Verify that all messenger and guy strand (span wire) conforms to ASTM A 475 extra high strength grade or better with a Class A coating, 7-wire span wire.
2. Verify 0.25 in. (6 mm) messenger and guy strand are used to support interconnect cable or as tether spans.
3. Messenger and guy strand 0.31 in. (7 mm) shall be used only where it is essential to match an existing
4. 0.31 in. (7 mm) span wire that will not be replaced as part of a new installation.
5. Verify all span wire for traffic signal faces, blank-out sign, optically programmed heads, lane control signs, standard, aerial, or sidewalk guys uses a minimum messenger and guy strand 0.38 in. (9 mm) as a minimum size.

B. Bull Ring Requirements

1. Provide bull rings that are galvanized weldless steel 0.63 in. (16 mm) diameter.
2. Submit catalog cuts for approval.

C. Balance Adjuster Requirements

1. Verify the balance adjuster consists of hardware that is cast from 316 Stainless Steel or 65-45-12 Ductile Iron or equivalent.
2. Verify castings are free of voids, pits, dents, molding sand, and excessive grinding marks.
3. Exterior surface shall be cosmetically acceptable and free of molding fins, cracks, and other exterior blemishes.

4. All hardware shall be supplied and be stainless steel or galvanized.

D. Lashing Rod Requirements

1. Verify that all lashing rods are sized in accordance with messenger and cable diameters to be supported.
2. Provide lashing rods that are of the same material as the messenger or guy strand.

E. Stainless Steel Lashing Wire Requirements

1. Provide lashing wire that is Type 316 stainless steel with 0.045 in. (1 mm) diameter.

F. Cast Aluminum Span Wire Clamp Requirements

1. Provide an exterior surface finish that is smooth and cosmetically acceptable, free of molding fins, cracks, and other exterior blemishes.
2. Verify that all design radii are smooth and intact.
3. Equipment
   a. Provide span wire clamps that are cast from Aluminum Alloy 713 or equivalent, free of voids, pits, dents, molding sand, and excessive foundry grinding marks.
   b. Verify that span wire clamps are fabricated from aluminum ingot with minimum requirements in Table 24.

Table 24 – Minimum Requirements for Span Wire Clamps	
Aluminum Alloy No.	713
Yield Strength, ksi (MPa)	25 (172)
Tensile Strength, ksi (MPa)	35 (240)
Brinell Hardness	75
Elongating [% in 2 in. (50 mm)]	3

   c. Verify that the span wire clamp can accommodate cables 0.25 in. (6 mm) to 0.63 in. (16 mm) diameter.
   d. Verify that the weight is less than 1.75 lb. (0.8 kg) with hardware.
   e. Verify that the span wire clamp has a minimum overall length of 7 in. (175 mm).
   f. Verify that the span wire clamp has a centerline dimension from cable to clevis pin of 2 in. (50 mm) [±0.5 in. (13 mm)].
   g. Verify that the span wire clamp has a cast aluminum cable bar to protect the cable when tightening the U-bolts.
   h. Verify that the span wire clamp has a mounting opening of 0.75 in. (19 mm) [±0.03 in. (0.8 mm)].
   i. Verify that the span wire clamp has 0.5 in. (13 mm) 13 NPT U-bolts with 0.5 in. (13 mm) lock washers and nuts.
   j. Verify that the clevis pins are 0.63 in. (16 mm) diameter with a length of 2.25 in. (56 mm) and secured with a hump back stainless-steel cotter pin.
   k. Verify that the clamp and cable bar have a chromate conversion coating to help resist oxidation.
   l. Verify that the clevis pin and hardware are galvanized per ASTM A 123/A 123M or stainless steel.

G. Cast Aluminum Tri-Stud Span Wire Entrance Fitting Requirements

1. Verify that all hardware is galvanized or stainless steel.
2. Verify that the exterior surface finish is smooth and cosmetically acceptable, free of molding fin, cracks, and other exterior blemishes.
3. Equipment

a. Verify that the Tri-Stud Span Wire Entrance Fittings are cast from Aluminum Alloy 713 or equivalent, free of voids, pits, dents, molding sand, and excessive foundry grinding marks.

b. Verify that all design radii are smooth and intact.

c. Verify that the Tri-Stud Span Wire Entrance fitting has a mounting support at the top of the wire entrance 0.69 in. (17 mm) thick [±0.07 in. (1.5 mm)].

d. Verify that the Tri-Stud Span Wire Entrance fitting weight is not less than 1.75 lb. (0.8 kg) with hardware.

e. Verify that the mounting support has at least six clevis openings for adjustment with suspension bracing between every two openings.

f. Verify that the Tri-Stud Span Wire Entrance has a minimum of 0.5 in. (13 mm) diameter throughout for wire access and that wire access is free of burrs and casting webs.

g. Verify that the wire entrance opening is recessed and has a neoprene grommet with sealed membrane sections.

h. Verify that the traffic signal face attachment end is serrated and has a minimum of 3-traffic signal face centering bosses extending 0.19 in. (5 mm) from the serrations.

i. Verify that the serrations have a 72-tooth design to match the traffic signal face.

j. Verify that three stainless steel studs are cast into the wire entrance fitting.

k. Verify that the studs are 0.31 in. (7 mm) and extend 1.5 in. (38 mm) [±0.13 in. (4 mm)] beyond the serrations.

l. Provide each Tri-Stud span wire entrance fitting with a Tri-Stud hardware kit.

m. Verify that the Tri-Stud Span Wire Entrance Fitting has a chromate conversion coating to provide a proper base for paint adhesion.

n. Verify that the assembly matches the display housing and baked in a drying oven after painting.

925.2.23 Timber Pole Requirements

A. General

1. Verify that all timber poles meet the requirements of Section 861.
2. Poles must be inspected and tested by the Department's Office of Materials and Testing and hammer stamped by the inspector.

B. Equipment

1. Verify that all poles have a brand or stamp 10 ft. (3 m) from the butt that notes the of type wood, date of manufacture, manufacturer, class, and length.
2. Verify that all timber poles that have guy attachments or support span wire or arms that suspend traffic signal faces over the roadway or sidewalk are Class II.
3. Poles that support loop lead-in, messenger, or communications cable that does not have guy attachments may be Class IV size.
4. Verify that all poles meet the requirements in Table 25 unless otherwise noted in the Contract.

Table 25 – Minimum Circumference of Timber Poles		
Class	Nominal Length, ft. (m)	At 6 ft. (2.4 m) from butt, in. (mm)
II	30 (9)	34.0 (860)
II	35 (10.5)	36.5 (930)
II	40 (12)	38.5 (980)
II	45 (13.5)	40.5 (1,030)
II	50 (15)	42.0 (1,070)
IV	30 (9)	29.5 (750)
IV	35 (10.5)	31.5 (800)
IV	40 (12)	33.5 (850)
IV	45 (13.5)	35.0 (890)

C. Guy Guard Requirements

1. Verify that all guy guards are high-impact-resistant PVC with UV stabilizers added for retention of color.
2. Verify that insulators attach to the guy so that they cannot easily be removed.
3. Use guy guards that are yellow unless otherwise directed.

D. Guy Strain Insulator Requirements

1. Verify guy strain insulators are protected from the environment, including the effects of voltage, UV rays, and acid rain by a fully bonded, electrically tack-free, and impenetrable silicone rubber sheath.
2. Each insulator shall be UL proof tested, and permanently marked to show date of test.

925.3 Construction

Construction for installation of Traffic Control Signal Equipment shall be according to Section 647.

925.4 Measurement

Measurement for the installation of Traffic Control Signal Equipment shall be according to Section 647.

925.5 Payment

Payment for installation of Traffic Control Signal Equipment shall be according to Section 647.

Revised for Cobb County

Section 926 – Wireless Communications Equipment

926.1 General Description

This section contains the requirements to furnish, install, test, and provide warranty and training for wireless communications equipment comprised of equipment and materials as specified herein and shown in the Contract documents.

926.1.01 Definitions, Acronyms, and Abbreviations

A. Definitions

Refer to Section 942.1 for a list of additional definitions and terminology used in this section.

1. **Wireless System, Type 1:** a 900 MHz, 2.4 GHz, or 5 GHz wireless Ethernet radio transceiver and associated equipment with up to 10 Mbps throughput capacity.
2. **Wireless System, Type 2:** a 2.4 GHz or 5 GHz broadband wireless Ethernet transceiver and associated equipment with up to 50 Mbps throughput capacity.
3. **Wireless System, Type 3:** a 2.4 GHz. or 5 GHz broadband wireless Ethernet transceiver and associated equipment with up to 100 Mbps throughput capacity.
4. **Wireless System, Type 4:** a broadband cellular wireless Ethernet router and associated equipment.

B. Acronyms and Abbreviations

Refer to Section 942.1 for a list of additional acronyms and abbreviations used in this section.

926.1.02 Related References

A. Standard Specifications

Section 682 – Electrical Wire, Cable, and Conduit

Section 939 – Communications and Electronic Equipment

Section 942 – ITS General Requirements

B. Referenced Documents

Refer to Section 942.1 for a list of standards and documents referenced in this section.

926.1.03 Submittals

Refer to Section 942.1 for submittal requirements.

926.2 Materials

926.2.01 Wireless Communications System Requirements

A. General

1. Comply with ISO 9001 or Six Sigma quality manufacturing requirements.
2. Provide only equipment and materials that are of new and of like kind and function provided by one manufacturer, using the same model, part number, and revision.

B. Overall System

1. Provide wireless system that supports the following site configuration types: PtP, PtMP (access point / subscriber unit) and repeater as shown in the Contract.
2. Provide a single-band or dual-band radio that is integrated with an antenna unit.

3. Provide capability for the user to select transmit power output level in incremental steps up to the maximum transmit output power.
4. Provide maximum transmit power, antenna gain that provides an EIRP as permitted by FCC Part 15 for unlicensed frequencies. Select final transmit power and antenna gain based on manufacturer's recommendation and distance and signal strength.
5. Provide a wireless link with path availability of 99.99% in worst-case weather conditions for the area where it is installed.
6. Provide wireless system with a minimum MTBF of 200,000 hours using Telcordia SR-332, latest version, or MIL-HDBK-217F standards.
7. Provide wireless system with dynamic frequency and channel selection capability based on interference detection, with a manual override option.
8. Provide wireless system with adaptive or automated modulation and space diversity capability for maximum throughput.
9. Provide wireless system with receive sensitivity that is adaptive.
10. Provide wireless system with a VSWR value not exceeding 2.0:1 for the specified radio frequency.
11. Design equipment for ease of maintenance. Ensure that all component parts are readily accessible for inspection and maintenance using hand tools. Provide test points for checking essential voltages, waveforms, signals, and similar data.
12. Provide support for the following minimum network and security requirements:
    a. Comply with IEEE 802.3 standards for Ethernet.
    b. Comply with IEEE 802.1D (Ethernet Bridging) standard.
    c. Comply with IEEE 802.1p (Traffic Prioritization/Quality of Service) standard.
    d. Comply with IEEE 802.1q (Virtual LAN [VLAN]) standard.
    e. Comply with IEEE 802.1d (Spanning Tree Protocol) and IEEE 802.1w (Rapid Spanning Tree Protocol) standards.
    f. Comply with IEEE 802.3x (Full Duplex and Flow Control) standard.
    g. Provide at a minimum AES-128-bit (AES-128) encryption capability, FIPS197, keys set through password-protected browser interface for PtP backhaul network. Minimum security for communications with WiFi units is WPA2.
    h. Provide support for internal MAC address control list and RADIUS networking protocol for authentication, authorization, and accounting.
13. Provide wireless system that meets the following minimum radio configuration and management software requirements:
    a. Provide programming and software to make operational and support the wireless system with the following minimum features: radio and network configuration, diagnostic routines (i.e., bandwidth test, spectrum scan, and ping test), and alarm management.
    b. Provide capability to display or provide status information of indicators that include data port link activity, data port speed, and link status.
    c. Provide capability to display the following alarm features:
        i. Provide 24 hour monitoring capability for user-selected alarms.
        ii. Provide optional alarm notifications via email or text messages.
14. Provide wireless system with bi-directional communications.
15. Provide wireless system including connectors that are IP67 weathertight rated and UV stabilized.

16. Provide wireless system with alignment tool for aligning the antenna system. Provide alignment tool that consists of audible indicators, or as recommended by the manufacturer.
17. Equip wireless system with a minimum of one shielded Ethernet-port, using an IP67 rated RJ-45 weathertight connector or other Ethernet-compatible locking shielded and weathertight connector.
18. Comply with FCC Part 15.247 (ISM) requirements.

C. Wireless System, Type 1

Meet the following system requirements, in addition to the requirements specified in Section 926.2.01.B:

1. Provide a system that operates in the FCC unlicensed (license-exempt) ISM band of 900 MHz, 2.4 GHz, or 5 GHz.
2. Provide aggregate system throughput of up to 10 Mbps in a LOS environment.
3. Provide a flat panel type, single (H or V) or dual polarized (H+V), narrow beam-width antenna, Yagi, or omnidirectional or as recommended by the wireless radio manufacturer.
4. Provide wireless system with minimum channel bandwidths of 5 MHz, 10 MHz, and 20 MHz.
5. Provide wireless system with OFDM or DSSS modulation technology.

D. Wireless System, Type 2

Meet the following system requirements, in addition to the requirements specified in Section 926.2.01.B:

1. Provide a system that operates in the FCC unlicensed (license-exempt) ISM band of 2.4 GHz or 5 GHz.
2. Provide aggregate system throughput of up to 50 Mbps in a LOS environment.
3. Comply with IEEE 802.11a/n standard.
4. Provide a 2x2:2 MIMO flat panel type, dual polarized (H+V), narrow beam-width antenna or alternative parabolic or as recommended by the radio manufacturer.
5. Provide wireless system with minimum channel bandwidths of 5 MHz, 10 MHz, 20 MHz, 40 MHz, and 80 MHz
6. Provide wireless system with OFDM modulation with BPSK, QPSK, QAM16, QAM64, and QAM 256.
7. Provide wireless system that supports MCS with dynamic data rate selection.
8. Provide wireless system with full support of SSL technology.
9. Provide wireless system that supports the following network requirements:
    a. Provide forward error correction capabilities with automatic retransmission.
    b. Provide dynamic allocation of uplink and downlink bandwidth.
    c. Provide capability for jitter correction to avoid delay fluctuation in video streams.
    d. Provide data burst transmission capability so that fragmented packets are transmitted together.
    e. Provide the capability to use a polling protocol to reduce packet loss due to RF collisions.
    f. Provide support for Layer 2 features including QoS and IGMP snooping to reduce un-needed multicast traffic.
10. Provide local and remote management capabilities through HTTP, Telnet, SSH, and SNMP.

E. Wireless System, Type 3

Meet the following system requirements, in addition to the requirements specified in Section 926.2.01.B:

1. Provide a system that operates in the FCC unlicensed (license-exempt) ISM band of 2.4 GHz or 5 GHz.
2. Provide aggregate system throughput of up to 100 Mbps in a LOS environment.
3. Comply with IEEE 802.11a/n standard.
4. Provide a 2x2:2 MIMO flat panel type, dual polarized (H+V), narrow beam-width antenna or alternative parabolic or as recommended by the radio manufacturer.
5. Provide wireless system with minimum channel bandwidths of 5 MHz, 10 MHz, 20 MHz, and 40 MHz.

6. Provide wireless system with OFDM modulation with BPSK, QPSK, QAM16, and QAM64.
7. Provide wireless system that supports MCS with dynamic data rate selection.
8. Provide wireless system with PoE port complying with IEEE 802.3 af standard.
9. Provide wireless system with full support of SSL technology.
10. Provide wireless system that supports the following network requirements:
    a. Provide forward error correction capabilities with automatic retransmission.
    b. Provide dynamic allocation of uplink and downlink bandwidth.
    c. Provide capability for jitter correction to avoid delay fluctuation in video streams.
    d. Provide data burst transmission capability so that fragmented packets are transmitted together.
    e. Provide the capability to use a polling protocol to reduce packet loss due to RF collisions.
    f. Provide support for Layer 2 features including QoS and IGMP snooping to reduce unneeded multicast traffic.
11. Provide local and remote management capabilities through HTTP, Telnet, SSH, and SNMP.

F. Wireless System, Type 4

1. Provide an integrated broadband cellular wireless router only as listed on the GDOT QPL and as approved by the Department's current cellular telecommunications service provider. No other devices are permitted.
2. Provide wireless system meeting the following general requirements:
    a. Provide 4G LTE or greater throughput as specified in the Contract documents or directed by the Department.
    b. Provide a broadband cellular wireless router that meets the following minimum network standards and protocols:
        i. Comply with IEEE 802.3 standards for 10/100/1000 Mbps Ethernet.
        ii. Provide full support for SSL.
        iii. Provide full support for IPsec and VPN functionality.
        iv. Provide at a minimum AES-128 encryption capability.
        v. Support MAC address filtering and ACL.
    c. Provide capability for network traffic to be accessible via a public or private IP connection, via VPN tunnel with SSL, IPsec, and IP pass-through.
    d. Equip wireless system with a minimum of one 10/100/1000 Base-T/TX, shielded Ethernet-port, outdoor- rated RJ-45 connector or other Ethernet-compatible weathertight connector.
    e. Provide wireless system with visual status indicators that include Power, Signal, Ethernet Link, and Activity.
3. Provide wireless system meeting the following antenna requirements:
    a. Provide an external ruggedized antenna for broadband wireless operations meeting the following minimum requirements:
        i. A minimum gain of 2.5 dBi, vertical polarized.
        ii. Omnidirectional pattern.
        iii. Up to 3W power.
        iv. Multiband support including the 698 to 960 MHz and 1,700 to 2,700 MHz bands.
    b. Provide mounting hardware as recommended by the manufacturer.
    c. Provide RF coaxial cable as specified in Section 926.2.01.J.3 between the wireless router and the antenna.
    d. Antenna shall be Cisco 4G-LTE-ANTM-O-3-B Multiband antenna or approved equivalent.

G. Mechanical

1. For non-integrated types provide a wireless radio that is capable of being rack- or shelf-mounted in a secure manner.
2. Provide wireless equipment that is modular in design such that it can be easily replaced in the field.
3. For Types 1 to 3 only, unit dimensions and weights shall be as follows:
   a. Maximum dimensions shall be 16 in (0.4 m) by 16 in (0.4 m) by 12 in (0.3 m) for integrated units, not including the antenna.
   b. Maximum weight shall not exceed 35 lb (16.9 kg).
4. Use external screws, nuts, and locking washers that are stainless steel. Do not use self-tapping screws unless specifically approved by the Department.
5. Use mounting hardware and parts made of stainless steel.
6. Use materials in construction that are protected from fungus growth and moisture deterioration.
7. Separate any dissimilar metals by an inert dielectric material.

H. Electrical

1. Provide wireless radios and routers that meet all specified requirements when the input power is 120 VAC ±20%, 60 Hz ±3 Hz.
2. Provide appropriate voltage conversion, PoE injectors, or other power supply hardware if the radio equipment or any radio-related ancillary devices require operating voltages other than 120 VAC or rely on PoE or PoE+.
3. Provide voltage converters or PoE injectors that accept an input voltage of 120 VAC as noted above.
4. Provide any required PoE or PoE+ devices that are 802.3af or 802.3at compliant, meeting the power requirements of the radio equipment.
5. Provide PoE injector that can be either wall/panel mounted, or DIN-rail mounted within the field cabinet.
6. Provide devices that meet the requirements in Section 2.1.4, "Power Interruption," of NEMA Standard TS 2.
7. Provide devices that meet the requirements of Section 2.1.6, "Transients, Power Service," of NEMA Standard TS 2.

I. Mounting and Support Structure

1. Provide wireless equipment mounting hardware that is designed to mount to the support structure as shown in the Contract.
2. Provide pole mounting attachment hardware that meets the requirements of the wireless system survey and the wireless manufacturer.

J. Cabling and Surge Protection

1. Provide antenna coaxial cables as specified herein for external antenna (non-integrated radio and antenna) sites or outdoor-rated Category-6 cables for integrated radio/antenna sites.
2. Provide outdoor-rated, shielded Category-6 cabling from the PoE injector to the wireless radio meeting the following minimum requirements:
   a. Comply with TIA-568-C.2 standard.
   b. Comply with ICEA S-56-434 standard or equivalent industry standard as approved by the Department for communications cables for outdoor use including weathertight, outdoor CMX UV-rated, abrasion- resistant jacket.
   c. Provide cable that is UL 444 sunlight resistant listed.
   d. Provide insulated No. 22 to 23 AWG, solid bare copper conductors with polyolefin insulation, arranged in four color-coded shielded twisted-pairs with drain wire incorporating a cross-web separator design.
   e. Provide modular IP67-rated shielded RJ-45 8P8C male push-pull connectors with eight-position non- keyed and eight gold anodized pins or other Ethernet-compatible locking weathertight connector.

3. Provide an RF coaxial cable meeting the following minimum requirements.
   a. Provide a cable that is flexible, low-loss, outdoor-rated and weathertight.
   b. Provide nominal impedance that is matched to the antenna's impedance to minimize the VSWR.
   c. Provide a cable with a black UV-resistant polyethylene jacket.
   d. Provide a cable with a dual shield consisting of 100% foil and 88% braided.
   e. Provide shielding effectiveness of >90 dB.
   f. Provide solid bare, copper center conductor.
   g. Provide a characteristic impedance of 50 ohms, nominal.
   h. Provide a cable with maximum frequency of 6 GHz.
   i. Provide an attenuation of 3.9 dB/100 ft. (at 900 MHz) or better. If cable length is shorter than 20 ft. (6.1 m), the cable can be smaller in diameter with a maximum attenuation of 9.9 dB/100 ft.
   j. Provide a capacitance (conductor to shield) of 23.9 pF/ft. or better, nominal.
   k. Provide an inductance of 0.060 μH/ft or better, nominal.
   l. Provide Type N connectors or as recommended by the manufacturer that are weathertight and factory installed on both ends with a maximum insertion loss of 0.2 dB.
   m. Provide maximum cable length of 10 ft. (3.05 m) from radio to antenna (if not integrated) when radio is mounted on an external structure. Provide 100 ft. (30.5 m) maximum length from radio to antenna when radio is mounted in the field cabinet and antenna is mounted on the structure.
4. Provide wireless system with surge protection that meets the following minimum SPD requirements.
   a. Category-6 Ethernet PoE Surge Protection
      i. Provide SPD that is listed per UL 497B.
      ii. Comply with TIA-568-B.
      iii. Comply with IEEE 802.3af or IEEE 802.3at as required.
      iv. Support 10Base-T, 100Base-T, and 1000Base-T transmission speeds.
      v. Provide a peak surge current rating (Imax) of a minimum of 10 kA (8/20 μs waveform).
      vi. Provide a clamping voltage of up to 90V ±20% for L-G and 20V ±20% for L-L
      vii. Provide surge protection for all connector pins.
      viii. Provide input and output connections with shielded RJ-45 connectors.
      ix. Provide an in-line, series-connected configuration.
      x. Provide system capable of being either wall/panel or DIN-rail mounted.
      xi. Provide an SPD that is constructed of aluminum metal housing.
   b. RF Coaxial Surge Protection
      i. Provide SPD that is listed per UL 497E.
      ii. Provide a rated nominal surge current (In) per UL 497E of 10 kA (8/20 μs waveform).
      iii. Provide a rated power/current (RF, DC) per UL 497E: VHF 375W, UHF (low) 250W, 800 MHz to 1 GHz 125W.
      iv. Provide a protection level of <1000V for up to 375W SPD.
      v. Provide an insertion loss of ≤0.2 dB over wireless system frequency range.
      vi. Provide SPD that supports a VSWR of 1.3:1.
      vii. Provide SPD with field replaceable gas discharge tube for maintenance.
      viii. Provide SPD with minimum environmental protection rating of IP65.

ix. Provide SPD with mating connectors per antenna type.

c. Provide hardware and materials to bond SPDs to the field cabinet ground buss bar.

K. Environmental

1. Provide wireless equipment and components as specified herein that meet the following minimum operating ambient temperature range and humidity levels:
   a. –4°F (–20°C) through 131°F (55°C)
   b. Up to 95% relative humidity (non-condensing)
2. Comply with NEMA 250, Type 4X corrosion requirements.
3. Comply with IEC EN 61000-4-5 surge immunity testing requirements.
4. Comply with NEMA TS 2 Sections 2.2.8 (vibration) and 2.2.9 (shock) test requirements.
5. Provide wireless system that is capable of withstanding wind speeds of 100 mph (161 kph) with a 20% gust factor.
6. Comply with FCC Part 15 emission standard and FCC Public Notice 2019-01.

926.3 Construction

The construction and installation of the wireless system equipment, materials, components, and assemblies as specified herein shall meet the requirements in this section and the wireless system manufacturer's installation requirements and recommendations.

926.3.01 Construction Requirements

A. General Construction

1. Provide, install, and test equipment and materials to provide a fully operational and functional wireless radio system. This includes installation of radio wireless radio equipment, mounting attachment hardware, power and data cables, test equipment, grounding and bonding, lightning suppression, and surge protection systems.
2. Prior to beginning installation, inspect each site to verify suitability of the design for installation, grounding, and lightning protection.
3. Adjust antenna polarities and channel plans on equipment to minimize interference from other sources, as applicable and determined by the wireless system survey.
4. Provide equipment that is modular in design such that it can be easily replaced in the field.
5. Label equipment with UV-resistant methods to identify each unit with name, model number, and serial number.
6. Provide connectors and harnesses that meet the following requirements:
   a. Provide external connections using weathertight connectors.
   b. Provide connectors that are keyed to preclude improper mating or coupling.
   c. Provide wires to and from the connectors that are color-coded or marked.
   d. Provide pins and mating connectors that are corrosion resistant.
   e. Provide solder type connections that are covered and protected by heat shrink tubing.

B. Wireless System Survey

1. Conduct wireless system survey if required by the Contract and upon approval of wireless system equipment and test equipment submittals.
2. Provide test equipment to conduct wireless system survey. Submit a list of equipment to the Department for approval prior to conducting the survey.
3. For Type 1, 2, and 3 only, survey wireless locations and provide a site-by-site analysis and overall system survey field report.

a. Verify that the path is clear and provide calculations to show that there is sufficient fade margin to achieve the path availability and to meet overall network performance as specified herein under the expected weather events.

b. Include an interference analysis of local RF conditions and a path analysis for each wireless node as shown in the Contract.

c. Provide an interference analysis for each wireless node location to identify potential sources of interference. If the interference analysis shows possibility for interference at sites identified in the Contract, conduct in-field monitoring to determine whether actual interference exists.

d. Include a field evaluation of the feasibility of using existing poles or structures for mounting the integrated wireless radio/antenna system.

e. Recommend based on the survey whether a single or dual-band radio is required to meet performance requirements.

f. Determine whether repeaters are required as part of the field survey and report the results.

4. For Type 4 only, determine and verify broadband cellular coverage for each proposed site. Each site shall have sufficient signal strength to provide full performance of the wireless link.

5. Submit the wireless system survey report to the Department for review and approval. Do not purchase or install equipment related to the wireless network prior to the approval of the wireless system survey report. Refer to Section 942.1.04 for details on submittal requirements.

C. Radio Mounting

1. Provide and install corrosion resistant radio mounts, standoffs, brackets, hardware, and grounding assemblies for the mounting surface shown in the Contract.

2. Install radios as recommended by the manufacturer at specified locations as shown in the Contract.

D. Antenna Mounting

1. Install antennas as recommended by the manufacturer. Permitting for attachment of wireless equipment on existing poles, if required, shall be the responsibility of the Contractor.

2. Provide and install antenna mounts, standoffs, brackets, hardware, transmission line, hanger kits, grounding kits, and lightning suppressors for the mounting surface shown in the Contract.

3. Impact of wind loading on wireless performance mounted on poles shall consider vibration, swaying, and bending of poles.

4. Align antenna for each path and compare measured signal strengths with path calculations.

5. For Type 4 only, mount the antenna on the field cabinet. Use threaded stub mount on the cabinet for vandal-resistant mounting.

E. System Power and Grounding

1. Provide all power supplies and PoE injectors required and recommended by the wireless manufacturer.

2. Coordinate with the Department to establish electrical utility service according to the NEC and as specified in Section 682.

   a. Verify with the local power service provider to ensure that the provided equipment is compatible with the installed equipment.

   b. Contractor shall be responsible for paying for electrical service as required from the time of testing up to the issuance of the MAL by the Department at which time the service provider account shall be transferred to the Department.

3. Supply and install any additional equipment required for proper operation of the wireless system per the design.

4. Comply with grounding and bonding requirements in Section 682 for wireless system, structure, and field cabinet, and as required and recommended by the wireless manufacturer.

5. If the field cabinet and associated entry port is not collocated on the same support structure as the radio, provide grounding and lightning protection at the bottom of the support structure.

F. System Optimization

Finalize equipment alignment and settings at each site to provide a complete and operational system.

G. Cabling

1. Provide conductors and wiring that meet NEC requirements.
2. Provide copper-based Ethernet cables that do not exceed IEEE 802.3 distance limitations.
3. Cut conductors to the proper length before assembly. It is not permissible to “double-back” conductors to take up slack inside the field cabinet.
4. Lace conductors neatly with nylon lacing or plastic straps.
5. Organize conductors neatly inside the field cabinet and secure cables with clamps.
6. Provide rubber grommets for drilled entrance holes in field cabinets, poles, conduit openings, and structures.
7. Provide service loops at connection points when connecting to hardware inside the field cabinet. No splicing of cables or exposed conductors is permitted.
8. Label cabling with weathertight and UV-resistant methods to identify conductors.

926.3.02 Equipment Configuration and Integration Requirements

Refer to Section 942.3 for equipment configuration and integration requirements.

926.3.03 Testing Requirements

Refer to Section 942.3 for testing requirements.

926.3.04 Training Requirements

Refer to Section 942.3 for training requirements.

926.3.05 Warranty and Maintenance Support Services

A. Warranty

1. Provide a minimum warranty length of two years for the wireless system and associated components. If the manufacturer’s warranties for the components are for a longer period, those longer period warranties shall apply.
2. Refer to Section 942.3 for general warranty requirements.

B. Maintenance Support Services

Refer to Section 942.3 for maintenance support services requirements.

926.4 Measurement

The wireless system and training that are complete, in place, accepted, and of the kind, size, and type specified will be measured as follows:

A. Wireless System, Types 1, 2, and 3

The wireless IP-based Ethernet system will be measured for payment by the number installed, complete, functional, tested and accepted. Unless otherwise specified in the Contract, furnish and install the following minimum items as part of a wireless system: a radio transceiver, antennas, antenna coaxial cables, Category-6 outdoor-rated cables, PoE injectors, power supplies, surge protection, attachment hardware, any pole attachment permit fees, and work, equipment, and appurtenances to provide a fully functional wireless communications system. The price bid shall also include radio configuration and management software, any licenses, programming, device cabling, and system documentation to be turned over to the Department, including shop drawings, operations and maintenance manuals, wiring diagrams, block diagrams, and other material necessary to document the operation of the applicable wireless radio system.

B. Wireless System, Type 4

The broadband cellular wireless system will be measured for payment by the number installed, complete, functional, tested and accepted. Unless otherwise specified in the Contract, furnish and install the following minimum items as part of a broadband wireless system: a cellular wireless router, antennas, cabling and associated components, and work, equipment, and appurtenances as required, to provide a fully functional broadband cellular wireless communications system. The price bid shall also include system documentation to be turned over to the Department and other material necessary to document the operation of the applicable broadband cellular wireless radio system. This price will be full compensation for labor, tools, materials, equipment, and incidentals necessary to complete the work.

C. Wireless System Survey

Wireless system survey will be measured as a lump sum for wireless measurement tools, supplies, equipment, materials, development of report and recommendations, travel, and subsistence necessary to conduct the wireless system survey.

D. Training

Training will be measured as a lump sum for supplies, equipment, materials, handouts, travel, and subsistence necessary to conduct the wireless training.

926.5 Payment

926.5.01 Wireless System

Wireless systems of the types specified in the Contract will be paid for at the Contract unit price. This price will include full compensation for labor, materials, equipment, tools, test equipment, incidentals, installation, testing, and providing warranty necessary to complete the wireless communications system.

Payment Notes:

Submittal

Submittal requirements are included in Section 942.1 and will not be paid for separately. It will be considered incidental to the wireless system pay item.

Testing

Testing is defined in Section 942.3 and will not be paid for separately. It will be considered incidental to the wireless system pay item.

Wireless Field Cabinets

New wireless field cabinets and enclosures will be paid for separately under Section 939.5 pay items.

GDOT Central Software Integration

GDOT Central Software integration is included in Section 942.3 and will be paid for separately under the Section 942.5 pay item.

Payment for the wireless system will be made under:

Item No. 926	Wireless System, Type _____ (Furnish Only)	Per each
Item No. 926	Wireless System, Type _____	Per each
Item No. 926	Wireless System Survey	Lump sum

926.5.02 Training

Payment for training will be made under:

Item No. 926	Training	Lump Sum

926.5.03 Adjustments

Refer to General Provisions 101 through 150

Revised for Cobb County

Section 935 – Fiber Optic System

935.1 General Description

This section contains the requirements to furnish, install, test, and provide warranty and training for a fiber optic system comprised of equipment and materials as specified herein and shown in the Contract.

935.1.01 Definitions, Acronyms, and Abbreviations

A. Standard Specifications

Refer to Section 942.1 for a list of additional definitions and terminology used in this section.

1. **Drop Fiber:** a smaller-strand count fiber optic cable that provides the interconnection of network equipment inside a field cabinet and/or a hub building to the trunk or backbone fiber optic cable.
2. **Encapsulate:** a resin or other material to prevent ingress of moisture into the fiber optic closure.
3. **Fiber Interconnect Cable**: a 12 or 24 fiber factory-connectorized cable from the splice tray to the back of the bulkhead connector panel.
4. **Fiber Pigtail Cable:** a single-fiber factory-connectorized cable from the splice tray or splice holder to the back of the bulkhead connector panel.
5. **FPP/FDU:** Patch Panels or Distribution Units used for fiber termination at field cabinets and hub buildings to provide network connectivity for ITS devices. FPPs are defined as providing 6 to 36 connectors or ports, and FDUs are larger, providing 48 to 288 connectors and ports.
6. **Trunk Fiber:** a multi-fiber count fiber optic cable that provides the network interconnection and transport between field cabinets, hub buildings, the TMC, and other facilities.

935.1.02 Related References

A. Standard Specifications

Section 647– Traffic Control Signal Installation

Section 942 – ITS General Requirements

B. Referenced Documents

Refer to Section 942.1 for a list of standards and documents referenced in this section.

935.1.03 Submittals

Refer to Section 942.1 for submittal requirements.

935.2 Materials

935.2.01 Fiber Optic Cable and Optical Requirements

A. General

1. Comply with ISO 9001 or Six Sigma quality manufacturing requirements.
2. Provide only fiber optic cables and components that are new (manufactured no more than one year prior to the Notice to Proceed) and provided by one manufacturer using the same model, part number, and revision. Provide the manufacturer date as part of the submittal process in Section 942.1.
3. Provide SM fiber optic cable that is splice-compatible with the Department's existing legacy G.652 SM fiber and requires no electronic equipment for dispersion compensation between new and existing fiber.
4. Provide fiber optic cables ranging from 6 strands to 288 strands as shown in the Contract.
5. Provide cables that comply with NFPA 70.

6. Provide cables that comply with RoHS Directive 2011/65/EU.

B. Fiber Optical

1. Provide fiber optic cables that comply with ICEA S-87-640.
2. Provide fiber optic cables that comply with Telcordia GR-20-CORE.
3. Provide SM fiber optic cables that comply with ITU-T G.652.D.
4. Provide SM fiber optic cables that comply with ITU-T G.657.A1.
5. Provide SM fiber optic cables that comply with TIA-492-CAAB (OS2).
6. Provide fibers that are 100% usable.
7. Provide SM fibers that meet optical performance requirements when tested according to TIA-455:
   a. Provide a fiber section that has attenuation of ≤0.35 dB/km at 1,310 with a variability of ≤0.03 dB/km between 1,285 nm and 1,330 nm. Test according to FOTP-78-B.
   b. Provide a fiber section attenuation of ≤0.25 dB/km at 1,550 nm with a variability of ≤0.02 dB/km between 1,525 nm and 1,575 nm. Test according to FOTP-78-B.
   c. Provide fiber that has a mode field diameter of 9.2 µm ±0.4µm at 1,310 nm and 10.4 µm ±0.5 µm at 1,550 nm. Test according to FOTP-191-B.
   d. Provide fiber that has uniform attenuation with no point discontinuities >0.05 dB at both 1,310 nm and 1,550 nm.
8. Provide a mechanically strippable, dual -layer, UV acrylate, color-coded protective coating.
9. Provide microfiber cables that meet the optical requirements of Section 935 and the following conditions:
   a. Be 288 strand single mode
   b. Use a maximum of 48 fibers per buffer tube
   c. Operational Temperature Range of -30 to 70 degrees C (-22 to 158 degrees F)
   d. Installation Temperature Range of -10 to 40 degrees C (14 to 104 degrees F)
   e. Maximum Attenuation of .35 dB/km
   f. Have a maximum weight of 56 lb/1000 ft
10. Contractor may use “air-jetting” to install microfiber cables. The microfiber nominal outer diameter shall not exceed the maximum size requirements to be “Airjet” into a microduct.

C. Fiber Optic Cable Construction

1. Provide OSP fiber optic cables with the following characteristics:
   a. Provide cable suitable for underground (i.e., in conduit) and aerial installation.
   b. Provide cable with a single jacket that is unarmored.
   c. Provide cable with an outside diameter of no greater than one inch.
   d. Provide all-dielectric (no metal or electrically conductive) materials.
   e. Provide water-blocking materials that are gel-free, dry-type, non-nutritive to fungus, electrically non-conductive, and homogeneous.
   f. Provide loose tune design that is SZ-stranded around an anti-buckling central strength member.
   g. Provide buffer tubes that contain 12 optical fibers placed inside each tube for cables 24 count and higher.
   h. Provide fibers and buffer tubes that are color coded according to TIA-598-D.
      i. Colors shall be stable during temperature cycling and aging.
      ii. Colors shall not fade or smear onto each other.

2. Provide cable outer jacket or sheath meeting the following requirements:
   a. Provide a minimum medium-density polyethylene black outer jacket as defined by ASTM D1248, Type II, Class C, Category 4 or 5 and Grades J4, E7, and E8.
   b. Provide a track-resistant polyethylene black outer jacket if the fiber optic cable is installed in an aerial application and the space potential is >12 kV.
   c. Provide jacket that is smooth; concentric; free from holes; consistent thickness; free of splits; blisters, and anu surface flaws; and contains carbon black to provide UV protection and prevent the growth of fungus.
   d. Provide a method of removal of the sheath.
3. Provide labeling for the fiber optic cable meeting the following minimum requirements:
   a. Label fiber optic cables (trunk and drop) using the following template, unless otherwise listed in the Contract:
      i. Manufacturer's name – Optical Cable – Year – Telecommunications Handset Symbol – GA DOT (or as required by the AHJ) – Description (which consist of XXX SM, where XXX denotes the fiber count).
      ii. Sequentially mark the cable length reflecting the distance from the cable origin point in English units evert 2 ft (0.6 m). Cable length markings shall be within 1% of the actual length of the cable.
      iii. Provide cable marking that is contrasting in color to the cable jacket. Marking font height shall be no less than 0.10 in (2.5 mm).
   b. Use cable marking that meets the following minimum requirements:
      i. Use 2.5 in (64 mm) wide, 4 in (100 mm), wrap-around type cable markers suitable for underground and aerial use.
      ii. Use UV-stabilized marker material and printing link to provide an aerial durability of at least five years.
      iii. Print text in bold black type on orange or yellow PVC markers.
      iv. Fabricate markers from PVC base material with a minimum thickness of 0.105 in (0.38 mm).
      v. Pre-print the following text, or alternate text shown in the Contract, legibly on markers used for the cables:

         Cable ID: XXXXXX

         Cobb County DOT

         Optical Cable

         Where XXXXXX is the cable ID as defined in the Contract.
      vi. Print the text specified above twice on every cable marker with the text of the second image reversed and abutting the first image so that the text "reads right" when either short edge of the cable marker is held horizontally upright.

D. Cable Performance

Provide fiber optic cable that has been tested in accordance with TIA-455 as shown in Table 1, resulting in no permanent change in attenuation, no signs of water leakage, no mechanical damage to the cable, and no adverse effects to the jacket or fibers. Upon the request of the Department, provide certification from an independent testing laboratory certifying the cable conforms to the following specifications and test procedures.

Table 1 – Fiber Optic Testing			
ID	**Parameter**	**Test Performed**	**Test Condition/ Specification**
Testing requirements that apply to all fiber optic cable			
1	Bend Test (Low and High Temperature)	TIA-455-37-A	Four full turns around mandrel of 20 times cable outer diameter at 4 hours of -22°F and +140°F (-30°C and +60°C)
2	Impact Resistance	TIA-455-25-D	25 impact cycles (at 4.4 nm) at different points along the sample
3	Compressive Strength (Crush Resistance)	TIA-455-41-A	125 lb/in (220 N/cm) (short)
4	Tensile and Fiber Strain (Macro-bending)	TIA-455-33-B	Maximum 600 lb (2,700 N) – during tensile load, Maximum 180 lb (800 N) – without tensile load
5	Cable Twist-Bend	TIA-455-85-A	10 cycles ±180 degrees of mechanical twisting
6	Cable Cyclic Flexing	TIA-455-104-B	25 times mechanical flexing cycles around a sheave of 20 times cable outer diameter
7	Temperature-Humidity Cycling	TIA-455-3-B	-40°F to +158°F (-40°C to +70°C)
8	Water (Fluid) Penetration	TIA-455-82-B	1 m static head for 1 hour
9	Cable Freezing	TIA-455-98	Frozen on ice
Testing requirements that apply to aerial fiber optic cable			
1	High Frequency (Aeolian) Vibration	IEEE P1222	100 million vibration cycles
2	Low Frequency (Galloping) Vibration	IEEE P1222	100 thousand vibration cycles

E. Fiber Patch Cord

1. Provide the same glass type and performance requirements as the manufacturer of the backbone and drop fiber optic cable provided in the Contract.
2. Provide factory pre-assembled, riser-rated, factory-tested, pre-terminated duplex patch cords with two fibers with connectors as described in Section 935.2.02.A on each end.
3. Provide patch cords that meet UL 94-V0 flammability requirements.
4. Provide lengths as listed in the Contract with a minimum of 1 ft (30 cm) slack between connected equipment.
5. Provide optical fiber within the body of fiber optic connectors that are mechanically isolated from cable tension, bending, and twisting.
6. Use yellow outer jackets for SM fiber optic cables.
7. Use connector boots of two colors for all duplex patch cords, zip cord, or round to distinguish between the two zip legs of the duplex cord.
8. Label duplex patch cords to distinguish between the two zip legs of the duplex cord.
9. Provide protective dust caps on the connector ferrules.
10. No splices of any type shall be within a patch cord assembly.
11. Provide qualification or certification data from the manufacturer up request by the Department.
12. Package each assembly individually within a plastic bag and clearly mark on the outside of that bag the submitted manufacturer's part number.

F. Environmental

Provide fiber optic cables, connectors, and splice trays that meet Telcordia R-20-CORE and ICEA S-87-640 temperature and humidity requirements.

935.2.02 Fiber Optic Components Requirements

A. Fiber Optic Splice Closure

1. House optical fiber splices within a fiber optic closure, complete with fiber splice trays and expressed buffer tube organizer, dome, grommets, end plate, mounting hardware and bracket, cable restraint hardware, buffer tube storage, splice protection, sealant materials, and any other materials and components needed to provide a completely sealed fiber splice closure installation.
2. Provide splice closures, organizers, cable end preparation tools, and procedures that are compatible with the fiber optic cable.
3. Provide splice closures that are stand-alone.
4. Use splice closures that are either “cylindrical dome” or “rectangular dome” type with cable entries at one end only and sealed, one-piece, high-density black UV-resistant polyethylene (thermoplastic) dome bodies.
5. Provide splice closures that are designed and tested in accordance with Telcordia GR-771-CORE requirements.
6. Provide splice closures consisting of three types depending on the number of splices required that meet the following requirements:
   a. Up to 48 fiber splice capacity (including trunk and drop cable splices): determine the number and type of splice trays by the number of splices required in the Contract. Provide splice closures that support up to four cable entries of at least 0.75 in (19 mm) diameter. These splice closures shall have maximum dimensions of 10 in (254 mm) diameter and 22 in (580 mm) length (smaller physical size is preferred).
   b. Greater than 48 and up to 144 fiber splice capacity (including both trunk and drop cable splices): determine the number and type of splice trays by the number of splices required in the Contract. Provide splice closures that support up to four cable entries of at least 1.0 in (25 mm) and at least two additional cable entries of at least 0.75 in (19 mm) diameters. These splice closures shall have maximum dimensions of 10 in (254 mm) diameter and 22 in (580 mm) length (smaller physical size is preferred).
   c. Greater than 144 and up to 288 fiber splice capacity (including both trunk and drop cable splices): determine the number and type of splice trays by the number of splices required in the Contract. Provide splice closures that support up to four cable entries of at least 1.0 in (25 mm) and at least two additional cable entries of at least 0.75 in (19 mm) diameters. These splice closures shall have maximum dimensions of 10 in (254 mm) diameter and 28 in (711 mm) length (smaller physical size is preferred).
7. Provide splice closures that are capable of storage and expressing through all unopened buffer tubes when configured for any number of splices as specified above.
8. Provide a flexible thermoplastic compression seal grommet for each end plate cable port that matches the required number and size of cables coming in and out of the splice closure without jeopardizing the weathertight characteristics of the splice closure.
9. Hermetically seal closures to protect fiber, splices, and internal components from water entry, including being submerged in standing water, without the use of an encapsulate material.
10. Provide splice closures that are sealed from insects, rodent proof, airtight, crush resistant, chemical-resistant, and corrosion resistant.
11. Provide an external pressurization air valve or port for flash testing the splice closure.
12. Provide fiber organizers that comply with Telcordia GR-769-CORE and splice trays that organize fiber buffers, protect fiber splices, and provide fiber and buffer slack storage.
13. Provide splice closures that can be re-entered and resealed using no special tools.
14. Provide reusable sealing materials (grommets, O-rings, etc.) that allow multiple re-entries and closures without removal of any component and without disruption to the surrounding cables.
15. Provide splice closures that are suitable for mounting on the inside wall of an underground buried (electrical communications box) ECB, pull box, or aerial messenger or strand as listed in the Contract.
16. Use corrosion-resistant aluminum, hot-dipped steel, or stainless-steel mounting brackets and hardware.
17. For aerial installation, provide closure that also meets the flowing minimum requirements:

a. Provide universal mounting bracket with features to permit aerial strand mounting with strand clamps or as approved by the Department.

b. Provide a product that is designed to eliminate the need for drip collars and sealing collars.

c. Package the closure with all hardware required for aerial mounting.

B. Fiber Splice Tray

1. Hold each fiber strand and buffer tube in the tray so that no stress or tensile force is placed on completed and finished fusion splices within the tray.
2. Loop individual fibers one full turn within the splice tray to avoid micro bending.
3. Always maintain minimum bend radius.
4. Provide slack storage for exposed fibers and buffer tubes to prevent damage to fibers.
5. Provide splice trays that include a cover with a locking mechanism to hold it in place.
6. Provide access to individual fibers without disrupting other fibers in the tray.
7. Provide fiber that is capable of being visually inspected.
8. Package and protect each fusion-spliced fiber housed within the splice tray with a minimum of 1.5 in (40 mm) reinforced, heat shrink, and weathertight sleeve.

C. Fiber Optic Connector

1. Provide certified LC fiber optic connectors for SFP optical transceivers for network switches and for FPPs and FDUs with greater than 12-port terminations.
2. Provide only ST-compatible, ceramic-insert couplers where barrel couplers are used in passive termination applications such as FPPs and FDUs with 6 and 12-fiber port terminations.
3. Provide connectors that comply with TIA-568-B.3.
4. Provide connectors that comply with TIA-604-10B (Type LC) and TIA-604-2B (Type ST) intermateability requirements.
5. Test connectors according to Telcordia GR-326-CORE.
6. Provide ceramic ferrule UPCs that are polished.
7. Mechanically isolate the optical fiber within the body of connectors from cable tension, bending, and twisting.
8. Provide connectors that are factory-assembled and tested. No field installed connectors are permitted.
9. Provide unmated connectors with protective dust caps installed. Always provide dust caps for both sides of couplers at all times until permanent connector installation.
10. Provide industry standard approved connector for optical fiber that meets or exceeds the applicable provisions of TIA=-455-X related to fiber optic connectors and interfaces and meets the following requirements:

    a. Insertion loss of ≤0.25 dB (typical) and ≤0.5 dB (maximum).

    b. Return loss (back reflection) ≤-55 dB (UPC) for SM, typical.

    c. Mating durability ≤0.2 dB (typical) change, 500 mating cycles.

D. FPP and FDU

1. Provide FPPs (6 to 36 connectors) and FDUs (48 to 288 connectors) that meet the requirements presented in this section.
2. Provide FPPs that comply with TIA-310-D standard 19-in rack-mounted applicable to wall or panel mounted installation.
3. Provide FDUs that comply with TIA-310-D standard 19-in rack-mounted applicable to wall mounted installation.
4. For 6 to 36 connectors, use FPP enclosures that integrate the splice trays and connector modules into one compartment within one enclosure. For 48 connectors and larger, use FDU enclosures as one integrated

compartment or house the splice trays and connector modules in separate compartments integrated into one enclosure.

5. Provide splice trays for storing the number of fusion splices as listed in the Contract. For FPPs with 12 connectors or less, splice holders within the FPP compartment may be used in lieu of splice trays.
6. Provide FPPs and FDUs that meet UL 94-V0 flammability requirements.
7. Provide wire management system at every FPP and FDU location for fiber optic cables and patch cords
8. Provide access to fiber splicing trays and fiber termination couplers meeting the following minimum requirements:
   a. Provide access from the front or rear with removable, fold-down or swing-out doors, drawers, and covers.
   b. Provide physical protection when doors, drawers, and covers are in the closed position that encloses the fiber splicing trays, fiber interconnection cables, fiber pigtail cables, and fiber termination couplers.
   c. Provide storage space to house and protect the number of splice trays required to splice and terminate the fibers.
   d. Provide rubber grommets or similar material to prevent the cable from contacting bare metal.
   e. Provide radius guides and strain relief for the incoming fiber optic cables(s) to maintain bend radius and protect the fibers.
   f. Provide bulkhead-mounted, termination coupling connectors that include locknuts for mounting the connectors in predrilled or punched holes in the connector panel.
   g. Provide bulkhead-mounted coupling connectors with dust caps.
9. Provide fiber interconnect cables and fiber pigtail cables meeting the following minimum requirements:
   a. Provide 12-fiber interconnect cables for FDUs with 12-splice capacity trays, and 24-fiber interconnect cables with FDUs with 24-splice capacity trays.
   b. Use only fiber-interconnect cables for FPPs and FDUs with 24 connectors or more.
   c. Provide single fiber pigtail cables or fiber interconnection cables for FPPs with less than 24 connectors.
   d. Provide cables with factory installed connectors in accordance with Section 932.3.03.A.
   e. Provide fiber pigtail cables with 900-micron tubing or 0.12 in (3 mm) fan out tubing as required for the application.
   f. Use fiber pigtail cables with 900-micron tubing only when fully endorsed within the FPP from splice tray to the back of the bulkhead connector panel.

E. Aerial Cable Lashing Materials

1. Provide minimum 0.038 in (96 mm) diameter lashing wire to attach aerial fiber optic cable to the messenger or strand.
2. Provide lashing wire, attachment, and mounting hardware with sufficient tensile strength for the application and meeting the requirements of ASTM F593/FF594 for corrosion resistance.
3. Use Type 302 stainless steel lashing materials in non-coastal regions and Type 316 along coastal regions within 5 miles (8 km) of the coastline.

F. Aerial Snowshoe Storage

1. Provide a factory-manufactured, UV-stabilized, snowshoe fiber storage unit that is designed to store designed to store excess or stack fiber optic cable or fiber optic cable and a splice closure in the span.
2. Provide fiber optic snowshoes utilizing corrosion resistant aluminum or stainless-steel hardware, including attachment between and to the snowshoe body case and the aerial support strand that maintain the minimum cable bend radius and have integral cable lashing strap slots or holes to secure cable attachments to the storage bracket. Do not use non-metallic attachment hardware.
3. Provide galvanized or stainless-steel hanging and attachment hardware (bolts, nuts, washers) and strand clamps for attachment to messenger or strand according to ASTM A135 and ASTM B695.
4. Provide cable protection bracket that minimizes cable abrasion and organizes cable against the pole.

5. Provide cable channel to secure the cable that minimizes ice and leaf loading.
6. Provide snowshoe design that minimizes the number of cable ties needed.
7. Provide weathertight, UV-resistant cable ties designed for continuous outdoor use.
8. Store the maintenance cable length for closure ground access with one fiber optic snowshoe and the aerial cable length attached to the same messenger strand to which the splice closure is attached.

G. Environmental

Provide fiber splice closures that meet Telcordia GR-771-CORE temperature and humidity requirements.

935.2.03 Not Applicable

935.3 Construction

The construction and installation of fiber optic cabling and components as specified herein shall meet the requirements in this section and the cable manufacturer's installation requirements and recommendations.

935.3.01 Construction Requirements

A. General Construction

1. Fiber Optic Installation Plan
   a. Develop a fiber optic installation plan for review and approval by the Department prior to fiber optic cable installation, splicing, and termination work. Include at a minimum the following components:
      i. Fiber running path line (route). Where not specifically shown in the Contract, show proposed trunk fiber and existing fiber (if any) to identify trunk to trunk fiber splice points, coordination of fiber allocation and associated splice details, and as-built drawings of the complete fiber system.
      ii. Vendor and part numbers for proposed materials and equipment (i.e., fiber optic truck and drop cables, splice closures and splice trays, splicer equipment, fiber patch panels, connectors and other materials required or needed).
      iii. Location of fiber drop cables and proposed splice locations.
      iv. Location of fiber terminations.
      v. Fiber splice details for each location, showing buffer/strand utilization and allocation plan.
2. Pack the cable and wrap in weathertight and temperature resistant covering to prevent damage during shipment, to facilitate unloading, and to allow for outdoor storage as approved by the Department.

B. Cable Installation Guidelines

1. Before installation begins, inspect the cable reels for imperfections such as nails that might cause damage to the cable as it is unreeled.
2. When unreeled cable is placed on the pavement or surface above a manhole, provide means of preventing vehicular or pedestrian traffic through the area in accordance with Section 150.
3. Comply with the manufacturer's recommended procedures and these specifications for cable handling.
4. Comply with the maximum recommended pulling tension during installation as specified by the cable manufacturer.
5. Comply with the minimum recommended bend radius during installation as specified by the cable manufacturer. Use large diameter wheels, pulling sheaves, and cable guides to maintain the bend radius. Always provide tension monitoring at all times during the pulling operation.
6. Unless the manufacturer's recommendations are more stringent, use the following guidelines for minimum bend radius:
   a. 20 times the outside cable diameter during installation
   b. 10 times the outside cable diameter after installation

7. If a mechanical pulling machine is used, equip the machine with a monitored or recording tension meter. At no time shall the manufacturer's recommended maximum pulling tension be exceeded. Submit the method of monitoring cable stress during installation to the Department for review and approval. The allowable pulling tension shall be the lesser of either of the two values below:
   a. Cable manufacturer's recommended pulling tension from the outer jacket for the cable
   b. 80% of the cable manufacturer's maximum pulling tension from the outer jacket
8. When using lubricants, comply with the cable manufacturer's recommendation for type, amount, application tools and method, and removal of the lubricant from the exposed cable. Pre-lubrication of cable is acceptable to provide uniform lubrication.
9. Use rollers and sheaves for difficult pulls to eliminate damage when entering and existing the conduit system.
10. During the installation of the fiber optic cable, record as-built fiber optic cable footage at riser locations, hand-holes, and slack storage options.
11. Where messenger cable is required, as shown in the Contact, lash aerial fiber optic cable to a steel strand wire messenger cable of the size specified in the Contract that conforms to Section 647.
12. Select fiber optic cable installation method that meets the following requirements:
   a. If pulling is utilized:
      i. Install the fiber optic cable by hand and/or by using a mechanical pulling machine.
      ii. Attach the central strength member and aramid yarn directly to the pulling eye during cable pulling. Use pulling attachments such as "basket grip" or "Chinese finger" type so that optical and mechanical characteristics are not degraded during the fiber optic cable installation.
      iii. Coil excess cable in a figure eight and feed manually when pulling through pull boxed by hand.
      iv. Provide a continuous section of cable throughout the pull. Cable breaks are permitted only at designated splice points.
   b. If air assisted/blowing is utilized:
      i. Use either the HASB or the Piston method.
      ii. When using the HASB method, the volume of air passing through the conduit shall not exceed 600 ft3/min or the conduit manufacturer's recommended air volume, whichever is more restrictive.
      iii. In cold temperatures, an air dryer accessory is recommended to avoid introducing water condensation into the HASB air inlet chamber or conduit/duct system. Condensation may result in frost. In hot temperatures, an air cooler is recommended to avoid excessive temperatures at the conduit/duct and cable.
      iv. When using the Piston method, comply with the conduit manufacturer's recommended air volume or limit to 300 ft3/min, whichever is less.

C. Cable End Sealing

1. Where a cable ends without termination in a fiber optic closure, seal the end of the cable by reusing a cable end cap shipped with a cable reel, or use a cap that is size-matched to the cable to be sealed.
2. Clean the end of the cable. Partly fill the cap with a weathertight silicone adhesive sealant and press the cap sully onto the cable end, rotating the cap to fully encapsulate the cable end with the sealant in the cap.
3. Apply a full sealant bead between the end of the cap and the cable jacket.

D. Cable Slack Storage

1. For aerial installations, meet the following requirements:
   a. Where messenger strand or cable is required, as shown in the Contract, lash aerial fiber optic cable to a steel strand wire messenger of the size specified in the Contract that conforms to Section 647.
   b. Store the excess or slack cable at storage loops in a "bow tie" configuration on the messenger strand using two fiber optic snowshoes (aerial fiber optic cable storage brackets) that maintain the proper bend radius in the fiber optic cable.

c. Install one fiber optic snowshoe for drop cable and trunk cable storage at aerial splice closures to maintain the bend radius in the fiber optic cable.

d. Use tie-wraps or tape for securing the cable to the snowshoe. Tie wraps and tape must be UV-resistant and designed for continuous outdoor use.

2. For underground applications, meet the following requirements:

a. Pull Box Types 4, 4S, 5, 5S, 6, and 7: Apply the following storage requirements for the indicated cable/splice closure situations.

i. Drop cable with no splice closure: 10 ft (3 m).

ii. One or more trunk cables with no splice closure: 110 ft (34 m) of each cable.

iii. Two or more trunk cables with one splice closure: Store 55 ft (17 m) of each trunk cable so that the splice closure can be removed from the pull box 55 ft (17 m). IOF a drop cable is spliced to the trunk cable at this point, store 55 ft (17 m) of each drop cable.

iv. One trunk cable with one splice closure: 110 ft (34 m). Install splice closure in the center of the 110 ft (34 m) cable loop so that the splice closure can be removed from the ECB 55 ft (17 m). If a drop cable is spliced to the trunk cable at this point, store 55 ft (17 m) of each drop cable.

v. One trunk cable with one splice closure and trunk cable ends. 95 ft (30 m). Install splice closure on the trunk cable at 55 ft (17 m) from the pull box. If a drop cable is spliced to the trunk cable at this point, store 55 ft (17 m) of each drop cable.

vi. Trunk cable ends with no closure: 95 ft (30 m).

b. Hub Building (interior); Do not store slack cable inside the hub building.

c. Hub Building (exterior adjacent ECBs): 180 ft (55 m).

d. Mini-Hub (exterior adjacent ECBs): 180 ft (55 m).

e. Traffic Control Center and TMC (OSP splice vault): 180 ft (55 m).

f. Traffic Control Center and TMC (Inside plant at equipment room): Cable entrance to distribution panel plus 20 ft (6 m).

g. ECB Types 3, 4, 5, and 6: Apply the following storage requirements for the indicated cable/closure situations. More than one situation may occur in a single ECB, in which case apply each requirement.

i. Trunk cable with no splice closure: 110 ft (34 m).

ii. Trunk cable with one splice closure: 110 ft (34 m). Measure the storage amount from the top of the ECB manhole opening. Install closure in the center of the 110 ft (34 m) cable loop so that the splice closure can be removed from the ECB 55 ft (17 m). If a drop cable(s) is spliced to the trunk cable at this point, store 55 ft (17 m) of each drop cable.

iii. Trunk cable with one splice closure and trunk cable ends: 95 ft (30 m). Install closure at 55 ft (17 m) from the ECB on the trunk cable. If a drop cable(s) is spliced to the trunk cable at this point, store 55 ft (17 m) of each drop cable.

iv. Trunk cable ends with no closure: 95 ft (30 m).

3. Unless otherwise noted in the Contract, the following are the minimum requirements for cable storage for aerial applications.

a. Install a minimum 150 ft (45 m) storage loop one-half the distance between every equipment drop or as shown in the Contract.

b. Where equipment drops are >1,000 ft (300 m) apart, install a minimum 150 ft (45 m) storage loop for every 1,000 ft (300 m) of uninterrupted cable length.

c. At aerial splice closures, install 75 ft (23 m) of drop cale storage and 150 ft (45 m) of trunk cable storage, unless otherwise noted in the Contract, to allow the fully assembled splice closure, including the trunk cable and drop cable, to be lowered to ground level for maintenance purposes.

E. Cable Splicing

1. Splice together each individual reel of fiber optic cable to provide a continuous length of installed cable.
2. Splice cable only at splice points shown in the Contract.
3. Make no splices within a fiber patch cord assembly or fiber optic drop cable.
4. Use the fusion technique for splices and terminations. Use a fusion splicing machine (fusion splicer) to splice optical fiber. Mechanical splicing is not permitted.
5. Provide fusion splicing equipment supported by calibration records indicating a factory calibration within three months preceding their use.
6. Clean and calibrate fusion splicing equipment per the manufacturer's specifications and specifically adjust the fiber and environmental conditions at the start of each splicing shift.
7. Comply with the cable manufacturer's and fusion splicer's procedures, accepted standards, codes, and practices. Do not install mechanical splices.
8. To prevent splice loss, meet the following requirements:
   a. Splice SM optical fibers using the fusion splice method. The mean (average) splice loss shall not exceed 0.1 dB for new fiber to new fiber and 0.3 dB (per TAI-568.3-D) for new fiber to existing (legacy) fiber.
   b. Not applicable.
   c. Obtain the mean splice loss by measuring the loss through the splice in both directions and then averaging the resultant values.
9. To protect splices, meet the following requirements:
   a. Protect fusion splices in solace trays or organizers in a splice closure.
   b. Provide the splice with strain relief and protection of the stripped fiber splice in a manner recommended by the splice tray or organizer manufacturer. Use splice types compatible with the tray design.
   c. Protect fusion splices with heat shrink tubing that protects the splice and extends over the fiber coating.
   d. Do not leave bare fiber exposed.
   e. Do not use silicone in any splice tray.

F. Mid Span/Drop Access

1. At points where mid span/drop access is required, keep fibers intact except those being accessed for the equipment drop.
2. Use a suitable tool for removing fibers from the buffer tube to prevent damage to the fibers remaining intact.

G. Connector Termination Procedures

Comply with procedures for the termination of the connectors as required by the connector manufacturer's fiber optic installation standard operating procedures for the field installation.

H. Cable Marking Installation

1. Clean the installed cable of dirt and grease before applying any marker.
2. Follow the marker manufacturer's recommended procedure for applying cable markers.
3. Mark cables in or at every hub building, ECB, pull box, hand-hole, field cabinet, aerial or underground splice closure, pole attachment, aerial storage bracket, and pole conduit riser entrance.
4. At every trunk cable termination, reel end-to-reel end splice, ECB, pull box, hand-hole, field cabinet, aerial splice closure, and aerial storage bracket, record the cable distance markings from the print-line for the cable entry and exit, along with the exact location by station number or location name.
5. Record the cable distance markings in a tabular format approved by the Department or on a documentation form provided by the Department.
6. Place cable markers in the following locations:
   a. Within 18 in (450 mm) of every cable entry to a pull box, hand-hole, ECB, and hub building

b. Within 6 in (150 mm) of every cable entry or termination in a field cabinet

c. Within 18 in (450 mm) of every splice closure at cable entry points

d. Within 6 in (150 mm) of every FPP/FDU or splice cabinet in a hub building in which cable terminates or enters

e. Every 20 ft (6 m) for all length of a cable in maintenance coils in ECBs or pull boxes

f. Within 12 in (300 mm) of every pole attachment, aerial storage bracket, and pole conduit riser entrance

7. Use orange markers at all locations, except as noted below:

   a. Where a trunk cable enters and leaves a closure (mid-span cable entry or end-to-end splice), use orange markers for one leg of the trunk cable and yellow for the other leg, placing corresponding color labels at the closure end of a leg and at the conduit entrance (underground installation) or span attachment (aerial installation).

   b. Where two drop cables terminate in a closure, use orange markers for one drop cable and yellow markers for the other drop cable throughout the drop cable's length to its termination.

I. Splice Closures

1. Install splice closures according to manufacturer's recommendations.
2. Install splice closures where shown in the Contract and in approximate center of fiber optic cable storage coils.
3. Mount splice closures in ECBs or pull boxes to cable rack hooks or mounting brackets.
4. Mounting hardware for closures must be aluminum, galvanized, or stainless steel.

J. FPP/FDU

1. Do not install mechanical splices or field installed connectors.
2. Equip unused panel slots with blank panels.
3. Provide inter-cabinet and inter-bay bend radius and jumper management on each side of the FDU.
4. Install hardware according to the manufacturer's recommended procedures and approved by the Department.
5. Determine specific hardware sizing from the Contract.
6. For rack-mount and wall-mount FPPs/FDUs, array connectors with fiber number one being at the top left or leftmost position.
7. Route and secure the drop cable beside or behind the field cabinet side panel such that it is fully strain-relieved, does not violate the manufacturer's recommended bending radius, and does not interfere with the operation or of access to any field cabinet equipment or electrical components.

935.3.02 Equipment Configuration and Integration Requirements

Not Applicable

935.3.03 Testing and Acceptance Requirements

Refer to Section 942.3 for testing requirements.

935.3.04 Training Requirements

Refer to Section 942.3 for training requirements.

935.3.05 Warranty and Maintenance Support Services

A. Warranty

Provide a minimum warranty length of two years for fiber optic cable and associated components. If the manufacturer's warranties for the components are for a longer period, those longer period warranties shall apply.

Refer to Section 942.3 for general warranty requirements.

Maintenance Support Services

Refer to Section 942.3 for maintenance support service requirements.

935.4 Measurement

The fiber optic system and training that are complete, in place, accepted, and of the kind, size, and type specified will be measured as follows:

A. Outside Plant Fiber Optic Cable, Loose Tube, Single Mode, No.

OSP fiber optic cable, loose tube, SM fiber will be measured in units of actual linear feet and paid for at the Contract price per linear feet, including cable slack. The price bid will include the length in feet of actual cable installed and tested as measured from the cable sequential length markings, cable print-lines, aerial snowshoes for storage (aerial segments), ancillary and incidental materials, documentation, and labor and equipment necessary to complete the work. No measurement for payment will be made for cable storage amounts in excess of that required in the Contract,

B. Fiber Optic Closure, Underground or Aerial, No. Splices

Underground and aerial sealed fiber optic closures will be measured for payment by the number of units installed, complete, functional, tested and accepted. Fiber optic closures will be measured in units of each and paid for at the Contract unit price each, which will include, but not be limited to, splice closure, splice trays, splices, splice protection, organizer, dome end plate, cable port sealing grommets, sealant material, cable end preparation tools, mounting hardware within the pull box or on the messenger strand, ancillary and incidental materials, testing, documentation, and labor and equipment necessary to complete the work.

C. Fiber Patch Panel or Fiber Distribution Unit, Rack or Wall Mount, No. Ports

FPPs and FDUs will be measured for payment by the number of units installed, complete, functional, tested and accepted. The number of ports is equal to the number of fibers, FPPs and FDUs will be measured in units of each and paid for at the Contract price each, which will include, but not be limited to, housing, splice trays or splice holders, fiber interconnect cables, fiber pigtail cables, splices between the incoming cable fibers and fiber interconnect/pigtail cables, splice protection, connector modules, connectors, wire management, mounting hardware with field cabinet/hub rack and wall mounting hardware, ancillary and incidental materials, testing, documentation, and labor and equipment necessary to complete the work.

D. Fiber Optic Splice, Fusion

Fiber optic splice fusion splices will be measured for payment by the number of splices made, complete, tested and accepted. Fiber optic fusion splices will be measured in units of each and paid for at the Contract unit price per each, which will include, but not be limited to, ancillary and incidental materials, testing, documentation, and labor and equipment necessary to complete the work. Fiber optic splices associated with the use of fiber interconnector cables and fiber pigtail cables, in accordance with Section 935.2.03 will not be measured separately for payment.

E. Fiber Optic Patch Cord, SM

Fiber optic patch cord, SM will be measured for payment by the number of patch cords provided, installed, tested and accepted. Patch cords will be measured in units of each and paid for at the Contract price per each, which will include, but not be limited to, ancillary and incidental materials, testing, documentation, and labor and equipment necessary to compete the work.

F. Fiber Pigtail Cable, SM

Fiber pigtail cables, SM will be measured for payment by the number of pigtails provided, installed, tested and accepted, and only when separately denoted by pay item in the Contract. Fiber pigtail cables will be measured in units of each and paid for at the Contract price per each, which will include, but not be limited to, ancillary and incidental materials, testing, documentation, and labor and equipment necessary to compete the work.

G. Fiber Interconnect Cable, SM

Fiber interconnect cable, SM will be measured for payment by the number of interconnect cables provided, installed, tested and accepted, and only when separately denoted by pay item in the Contract. Fiber interconnect cables will be measured in units of each and paid for at the Contract price per each, which will include, but not be limited to, ancillary and incidental materials, testing, documentation, and labor and equipment necessary to complete the work.

H. Fiber Optic Connectors, SM

Fiber optic connectors, SM will be measured for payment by the number of connectors provided, installed, tested and accepted. Fiber connectors will be measured in units of each and paid for at the Contract price per each, which will

include, but not be limited to, ancillary and incidental materials, testing, documentation, and labor and equipment necessary to complete the work.

I. Not Applicable

J. Not Applicable

K. Not Applicable

L. Not Applicable

M. Not Applicable

N. Training

Training will be measured as lump sum for supplies, equipment, materials, handouts, travel and subsistence necessary to conduct the training.

935.5 Payment

935.5.01 Fiber Optic System

Fiber optic cable, splice closures, fiber splices, interconnect cables, pigtails, fiber patch cords, and fiber optic connectors will be paid for at the Contract unit price. This price will include full compensation for labor, materials, equipment, tools, test equipment, incidentals, installation, testing, and providing warranty necessary to complete the fiber optic system.

Payment Notes:

Submittal

Submittal requirements are included in Section 942.1 and will not be paid for separately. It will be considered incidental to the fiber optic system pay item.

Payment for the fiber optic system will be made under:

Item No. 935	Outside Plant Fiber Optic Cable, Loose Tube, Single Mode, __ Fiber	Linear Feet
Item No. 935	Fiber Optic Connectors, SM	Per each
Item No. 935	Fiber Optic Patch Cord, SM	Per each
Item No. 935	Fiber Interconnect Cable, SM	Per each
Item No. 935	Fiber Pigtail Cable, SM	Per each
Item No. 935	Fiber Optic Splice, Fusion	Per each
Item No. 935	Fiber Optic Closure, Underground, __ Splice	Per each
Item No. 935	Fiber Optic Closure, Aerial, __ Splice	Per each
Item No. 935	Fiber Patch Panel, Rack Mount, __ Port	Per each
Item No. 935	Fiber Patch Panel, Wall Mount, __ Port	Per each
Item No. 935	Fiber Distribution Unit, Rack Mount, __ Port	Per each
Item No. 935	Fiber Distribution Unit, Wall Mount, __ Port	Per each
Item No. 935	Testing	Lump Sum

935.5.02 Training

Payment for training will be made under:

Item No. 935	Training	Lump Sum

935.5.03 Adjustments

Refer to General Provisions 101 through 150.

Revised for Cobb County

Section 936 – Closed Circuit Television

936.1 General Description

This section contains the requirements to furnish, install, test, and provide warranty and training for a closed-circuit television CCTV camera system comprised of equipment and materials as specified herein and shown in the Contract.

936.1.01 Definitions, Acronyms, and Abbreviations

A. Definitions

Refer to Section 942.1 for additional definitions used in this section.

1. Camera Mounting Arm, Types 1, 2, 3, and 4: A structural arm to which a CCTV camera system is mounted.
2. Camera Lowering Device: equipment that mechanically lowers the CCTV camera system to ground level.
3. CCTV Camera System, Type 1: an IP, PTZ, HD, dome type camera, non-pressurized.
4. CCTV Camera System, Type 1P: same as Type 1, except with pressurized housing.
5. CCTV Camera System, Type 2: an IP, PTZ, HD, turret/positioning type camera, non-pressurized.
6. CCTV Camera System, Type 2P: same as Type 2, except with pressurized housing.
7. CCTV Camera System, Type 3: an IP, fixed, HD, barrel/ box type camera, non-pressurized.
8. CCTV Camera System, Type 3P: same as Type 3, except with pressurized housing.

B. Acronyms and Abbreviations

Refer to Sections 101.01 and 942.1. for a list of acronyms and abbreviations used in this section.

936.1.02 Related References

A. Standard Specifications

Section 639 – Strain Poles for Overhead Sign and Signal Assemblies

Section 682 – Electrical Wire, Cable, and Conduit

Section 925 – Traffic Control Signal Equipment

Section 926 – Wireless Communications Equipment

Section 939 – Communications and Electronic Equipment

Section 942 – ITS General Requirements

B. Referenced Documents

Refer to Section 942.1 for a list of standards and documents referenced in this section.

936.1.03 Submittals

Refer to Section 942.1 for submittal requirements.

936.2 Materials

936.2.01 IP-Based CCTV Camera Requirements

A. General

1. Comply with ISO 9001 or Six Sigma quality manufacturing requirements.
2. Provide only equipment and materials that are new and of like kind and function provided by one manufacturer, using the same model, part number, revision, and firmware as shown and specified in the Contract.
3. Support an open and published application programming interface or software development kit that provides the necessary information for integration of functionality into third party applications and the users' central control system environment.
4. Provide management system and user interface that meet the following requirements:
   a. Manage encoder through HTTP and HTTPS.
   b. Provide a built-in web server user interface making video, status, and configuration available to multiple clients in a standard operating system and browser environment using HTTP, without the need for any additional software of any kind, except video player plugins solely for displaying a live image stream of the video output.
   c. Provide web server user interface that supports access to all configurable parameters in the CCTV camera system, without the need for any separate textual or line commands of any kind.
   d. Provide user-configurable password-protected accounts with a least one full administrative and one read/view permissions profile.
   e. Provide capability to reset or reboot and upload firmware via the management system requirements.
      i. Update the CCTV firmware from a network connection.
      ii. Access the firmware number, IP address, and equipment configuration.
5. Provide configuration backup providing automatic recovery from over or under voltage condition when prime power has returned to the tolerance values specified herein.
   a. Store configuration parameters in a non-volatile memory.
   b. Provide a camera system that requires no reprogramming or manual adjustments upon power recovery.

B. CCTV Camera

1. Provide camera system with a progressive scan digital CMOS or CCD image sensor.
2. Provide camera system with an HDTV user-configurable image resolution of 1080P (1920 x 1080) to 352 x 240-pixel array.
3. Provide camera system that allows user-configurable frame rate from 5 up to 30 frames per second (fps) with a default of 30 fps.
4. Provide camera system that has removable IR-cut filter, providing day (color) and night (monochromatic) functionality.
5. Provide camera system that supports a video image width to height aspect ratio of 16:9.
6. Provide camera system that meets the following image processing requirements:
   a. Automatic and manual electronic shutter speed setting that is user selectable from 1/2 second to 1/30,000 second at 60 Hz.
   b. Automatic and manual gain control that is user selectable.
   c. Automatic and manual white balance control that is user selectable.
   d. On/off backlight compensation operation with user control.
   e. On/off wide dynamic range operation with user controls and manual override option.
   f. Automatic and manual defog mode that is user selectable.

g. On/off EIS algorithms integrated within the camera assembly system, including:

i. Compensation algorithms based on movement wavelengths associated with vibrations present at the roadside or pole movement (e.g., 5 Hz and 10 Hz sinusoidal frequencies at a minimum).

ii. EIS function that automatically pauses while PTZ functions are occurring and restores when no PTZ is occurring.

iii. Stabilization such that standard Department of Transportation placards with a size of 1 ft. (0.3 m) by 1 ft. (0.3 m) are continuously legible in conjunction with viewing specification and maximum zoom level of 500 ft. (150 m).

7. Provide a camera system with a lens that meets the following requirements:

a. Types 1, 1P, 2, and 2P: provide camera with an integrated zoom lens assembly for each camera with the following features:

i. Aperture f-stop of f/1.6 (wide) or better zoom lens with variable focal lengths.

ii. Minimum 30X optical zoom and 2X digital zoom.

iii. Automatic switching from optical zoom to digital when optical zoom range is exceeded.

iv. Adjustable zoom speed.

v. Automatic and manual user selectable focus control.

vi. Automatic and manual user selectable iris control to compensate for changes in scene illumination to maintain constant video-level output within sensitivity specifications.

b. Types 3 and 3P: provide camera with a varifocal lens for each camera with the following features:

i. Aperture f-stop of f/1.4 (wide) or better.

ii. Horizontal angular field of view of approximately 46 degrees (wide angle) to 9 degrees (telephoto).

iii. Adjustable zoom remotely through the camera's web interface. Final focus shall be adjustable through camera's web interface.

8. Provide camera system sensitivity that has useable video at the following ambient low light conditions:

a. Scene Illumination: F-stop set at wide open at 50% video (50 IRE)

b. Lux (0.1 fc) at 1/30 shutter, color mode

c. Lux (0.01 fc) at 1/30 shutter, monochromatic (black and white) mode

C. Pan/Tilt (P/T) Positioning Drive

1. Types 1, 1P, 2, and 2P: provide P/T Range and Speed that meet the following requirements:

a. Provide camera system that has an integrated P/T unit that meets the following minimum requirements:

i. Pan Range: 360 degrees, full endless or continuous rotation movement.

ii. Pan Manual Speed: variable up to 90 degrees per second (minimum), user adjustable through the full speed range.

iii. Pan Preset Speed: minimum 180 degrees per second.

iv. Preset Pan Repeatability: ±0.36 degree, or <0.10% or better.

v. Tilt Range: minimum of 90 degrees total tilt range for Type 1 and 1P cameras and minimum 180 degrees total tilt range for Type 2 and 2P cameras.

vi. Tilt Manual Speed: variable up to 90 degrees per second (minimum), user adjustable through the full speed range.

vii. Tilt Preset Speed: minimum 180 degrees per second.

viii. Preset Tilt Repeatability: ±0.36 degree, or <0.10% or better.

b. Provide camera system with automatic electronic image inversion or “auto flip” functionality that can automatically rotate the image 180 degrees electronically when following a moving object passing under the camera. No mechanical stops are permitted.

c. Provide camera system with proportional zoom control allowing variable P/T speeds based on “zoom” position. This is to scale the maximum P/T speed, while maintaining variable speed capability throughout the zoom range of the camera.

2. Types 1, 1P, 2, and 2P: provide camera system that has P/T presets that meet the following minimum requirements:

a. Minimum of 64 presets for PTZ and focus settings.

b. Minimum of eight tours (sequences) that allow the camera to automatically move between selected presets using an individual speed and viewing dwell time for each preset.

c. Minimum of eight programmable blackout privacy masks or zones.

D. Video Encoding

1. Provide camera system that complies with the following video encoding standards:

a. ISO/IEC 14496-10, Advanced Video Coding (H.264 and H.265), Baseline, Main and High Profiles

b. Motion JPEG (MJPG)

2. Provide camera system that complies with the following HDTV video standards in regard to resolution, frame rate, aspect ratio, and color fidelity:

a. SMPTE 296M (HDTV 720P)

b. SMPTE 274M (HDTV 1080P)

3. Provide camera system that meets the following video stream format and configuration requirements.

a. Simultaneous and continuous encoding and streaming for a minimum of three video streams. The activation of one, two, or three simultaneous and continuous streams shall not result in performance degradation of any video stream, video image, control function, or device management interface. The video streams shall meet the following requirements:

i. 4 Mbps/1920 x 1080/H.264, High Profile/30 fps/RTP

b. Encoding parameters for minimum ranges and operation that can be independently and individually configurable by the user for each stream:

i. Target multicast address, port and time-to-live setting

ii. Video compression technology and levels of H.264 Baseline, Main or High Profile for video and JPG/MJPG for snapshot captures or full frame captures from a video stream.

iii. Image resolution of 1080P (1920 x 1080) to 352 x 240 and 720P (1280 x 720) to 352 x 240.

iv. Frame rate that is adjustable 5 to 30 fps (North American, 60 Hz).

v. Bandwidth and encoding bit rate control that is variable bit rate or constant bit rate/maximum bit rate selectable from 256 Kbps to 6 Mbps.

4. Provide camera system with encoded streams that are fully compatible with the following requirements:

a. GDOT Central Software video decoding system

b. VLC (Video LAN Client) Version 2.1.3

5. Provide camera system that meets the following video snapshot requirements.

a. Create JPG snapshots from either a dedicated stream or from any of the video streams at a minimum interval of 60 seconds.

b. Image transfer via FTP either by push or pull at a user-defined interval between 60 and 300 seconds.

c. OSD capabilities in the snapshot images.

d. Target FTP server settings including connection credentials for push function.

e. A minimum space for 32 characters for the snapshot filename for push function.

6. Provide camera system that meets the following minimum OSD requirements:

a. Static text insertion on streams and snapshots inserting a minimum of two lines of user configurable text messages with support for date, time and cardinal angle/compass of at least 30 ASCII characters in length.

b. Text insertion that scales appropriately or is independently configurable for different video image size and snapshot resolutions.

c. JPG, BMP, GIF, or PNG image insertion on streams and snapshots in the upper portion of the image, using image file(s) uploaded by the user and stored in the encoder's memory and configuration. Text display on the side of the image is prohibited.

d. Image insertion that scales appropriately for different video image size and snapshot resolutions, or the ability to insert a different image file for each stream and snapshot.

E. Communications and Network

1. Provide a network format that complies with IEEE 802.3, 802.3u, and 802.3x; 10/100 Mbps or higher, auto sensing full and half-duplex operations.

2. Provide network hardware interface including a minimum of one 10BASE-T/100BASE-TX PoE Ethernet-port using an IP66 rated RJ-45 weathertight connector and coupler or other Ethernet-compatible locking weathertight connector and coupler.

3. Provide video encapsulation of each of the video streams in UDP packet and TCP packets, depending on stream configuration, for network transmission.

4. Support network protocol standards RTP, RTSP, TCP/IP, UDP, IPv4, IGMP v2, SNMP v1/v2c/v3, HTTP, HTTPS, QoS DiffServ, DNS, DHCP, FTP, Network Time Protocol or Standard Network Time Protocol, SSL, Unicast, and IP Multicast features for digital video transmission, individually and independently for each stream.

5. Support communications protocols including NTCIP 1205 V01Amd or later and the latest versions of ONVIF Profile S and ONVIF Profile T requirements.

6. Provide video network transmission that meets the following requirements:

a. Support both unicast (one-to-one) and multi-cast (one-to-many) streams simultaneously.

b. Allow for video to be transported over:

i. RTP (Unicast and Multicast)

ii. RTP over RTSP (Unicast)

iii. RTP over RTSP over HTTP (Unicast)

iv. HTTP/HTTPS tunneling (Unicast)

7. Provide network IP addressing capabilities that meet the following requirements:

a. Support both fixed IP addresses and dynamically assigned IP addresses provided by a DHCP server.

b. Support static management interface IP addressing (classes A, B, and C).

c. Support static IP addressing of the multi-cast group individually and independently for each stream.

F. Mechanical

1. General

a. Mount CCTV camera and other required components on a single existing or new support structure or pole, unless otherwise specified in the Contract.

b. Provide new support brackets, mounting hardware, and ancillary materials to mount CCTV camera and components.

c. Provide housing that protects the camera and housing against water, dust, corrosive elements, and insect intrusion into the camera casing or housing.

d. Provide housing that is secure from unauthorized entries and vandals.

e. Provide a camera assembly that secures to the camera mounting arm with a completely weathertight system with no water penetration into any enclosure of the camera assembly.

2. Types 1, 2 and 3: Provide non-pressurized camera casing or enclosure that meets the following requirements:

a. Provide a casing or enclosure that is manufactured in compliance with IEC 60529 IP66, NEMA 4X, and IK08 ratings or greater.

b. Provide camera assembly that meets or exceeds the requirements stated above without the need for additional components such as mounting brackets and hardware to achieve the stated ratings.

c. Provide a light-colored external casing or enclosure.

d. Provide high-impact, non-metallic UV-stabilized material or an aluminum material with a heat-cured paint coating or powder coating.

e. Protect interior of casing by providing weathertight glands or grommets for cabling to maintain IP rating.

3. Types 1P, 2P, and 3P: Provide pressurized camera casing or enclosure that meets the following requirements:

a. Meet the casing or enclosure requirements specified in Section 936.2.01.F.2.

b. Meet the following minimum pressurization requirements:

i. Schrader inlet valve for pressurized extra dry nitrogen.

ii. Operating pressure range of 3 to 7 psi (21 to 48 kPa).

iii. Pressure relief valve for protection against overpressure.

4. Provide protection of viewing windows against degradation of materials and yellowing due to prolonged exposure to UV rays:

a. Optically correct material with infused inhibitors.

b. Material that is scratch resistant.

c. Polycarbonate, acrylic, or nylon material for the viewing windows.

5. Provide camera system with heating and ventilation that meets the following requirements:

a. Provide a heater and blower function to maintain internal temperatures within the manufacturer's operating temperatures for temperature ranges internal to the camera unit not conforming to the environmental requirements in Section 936.2.01.K.

b. Types 1 and 1P: provide a conventional mechanical thermostat-controlled heater and circulating blower fan system that is designed to keep the camera equipment within the required operational temperature range and to prevent condensation to maintain a clear viewing window.

c. Types 2, 2P, 3, and 3P: an alternative method may be provided to prevent dust and humidity build-up and to keep internal camera casing temperatures to within operational tolerances defined by the manufacturer as approved by the Department.

6. Provide CCTV camera system with mounting bracket that meets the following requirements:

a. Attach the CCTV camera system to the camera mounting arm as shown in the Contract and in compliance with the camera manufacturer's recommendations.

b. Provide the Type 1 and 1P CCTV camera system enclosure with a mounting coupling with 1-1/2 in. male pipe thread coupling in compliance with the camera manufacturer's recommendations to attach to the camera mounting arm.

c. Provide the Type 2 and 2P CCTV camera system enclosure with a mounting base plate mechanism that bolts to a mating plate on the camera mounting arm, in compliance with the camera manufacturer's recommendations.

d. Provide the Type 3 and 3P CCTV camera system enclosure with a mounting equivalent to either the Type 1 or Type 2, in compliance with the camera manufacturer's recommendations. If equivalent to the Type 1, use a 1-1/2 in. male pipe thread coupling in compliance with the camera manufacturer's recommendations.

e. Allow for cabling to be routed inside the poles and mounting hardware and protected from exposure to the outside environment.

f. Provide stainless steel mounting hardware and straps in accordance with MIL-STD-810F (3) Method 509 Procedure 1 for exterior salt atmospheres.

g. Provide opening in mounting bracket that fully encloses the cables. Provide non-metallic cable protection grommets for cable entrances.

h. Provide camera casing mounts that can accommodate a weight load capacity of no less than 40 lb. (18 kg).

7. Provide mechanical CCTV camera components including attachment and mounting hardware that meet the corrosion protection following requirements:

a. Stainless steel external screws, nuts, and locking washers. Self-tapping screws are not permitted.

b. Parts that are made of corrosion resistant material; examples include plastic, stainless steel, anodized aluminum, or brass.

c. Protect materials used in construction from fungus growth and deterioration due to sustained moisture.

d. Separate dissimilar metals by an inert dielectric material.

G. Electrical

1. Provide a standalone PoE injector.

a. POE service using a PoE capable Ethernet switch is not permitted.

2. Select PoE injectors that are based on power requirements of the camera system as recommended by the CCTV camera manufacturer conforming to the following PoE standards:

a. PoE+ in compliance with IEEE 802.3at

b. PoE++ in compliance with IEEE 802.3bt

3. Mount PoE injectors to wall or panel or DIN-rail mount within the field cabinet as approved by the Department.

H. Field Cabinet:

Provide system components that are compatible with the field cabinets shown in the Contract. The field cabinet is not included in the pay items defined in Section 936.5.

I. Cabling and Surge Protection

1. Provide outdoor-rated, shielded Category-6 cabling from the PoE injector that meets the following minimum requirements:

a. Comply with TIA-568-C.2 standard.

b. Comply with ICEA S-56-434 standard or equivalent industry standard as approved by the Department for communications cables for outdoor use including weathertight, outdoor CMX UV-rated, abrasion- resistant polyethylene jacket.

c. Provide cable that is UL 444 sunlight resistant listed.

d. Provide insulated No. 22 to No. 23 AWG, solid bare copper conductors with polyolefin insulation, arranged in four color-coded twisted-pairs with drain wire incorporating a cross-web separator design.

e. Provide modular IP66-rated weathertight RJ-45 8P8C male push-pull connectors and couplers with eight-position non-keyed and eight gold anodized pins or other Ethernet-compatible locking weathertight connector and coupler.

2. Provide category-6 Ethernet PoE surge protection that meets the following minimum SPD requirements:

a. Provide SPD that is listed per UL 497B.

b. Comply with TIA-568-A/B.

c. Comply with IEEE 802.3af and IEEE 802.3at or 802.3bt.

d. Support 10Base-T, 100Base-T, and 1000Base-T transmission speeds.

e. Provide a peak surge current rating (Imax) of a minimum of 10 kA (8/20 µs waveform).

f. Provide a clamping voltage of up to 90V ±20% for line-ground (L-G) and 20V ±20% for line-line (L-L).

g. Provide protection for all connector pins.

h. Provide input and output connections with shielded RJ-45 connectors.

i. Provide an in-line, series-connected configuration.

j. Provide system capable of being either wall orpanel or DIN-rail mounted.

k. Provide an SPD that is constructed of aluminum metal housing.

3. Provide bonding for SPDs, hardware, and other components within the field cabinet to the field cabinet ground buss bar.

J. Environmental

1. Provide equipment that meets the following operating ambient temperature range and humidity levels:

   a. Camera Assembly, Power Supplies and PoE Injectors

      i. –4°F (–20°C) through +140°F (+60°C, maximum).

      ii. Up to 95% relative humidity (non-condensing).

   b. Category-6 PoE Surge Protector

      i. –40°F (–40°C) to +149°F (+65°C, maximum)

      ii. Up to 95% relative humidity (non-condensing).

   c. SPD

      i. –30°F (–34°C) to +165°F (+74°C, maximum)

      ii. Up to 95% relative humidity (non-condensing).

2. Provide a camera assembly that meets the following environmental and emission requirements:

   a. Comply with the latest published version of NEMA TS 2 Sections 2.1.9, 2.2.3, and 2.2.8 and meet the specified requirements during and after being subjected to a vibration of 5 Hz to 30 Hz up to 0.5 g applied in each of three mutually perpendicular planes for 30 minutes.

   b. Comply with the latest published version of NEMA TS 2 Sections 2.1.10, 2.2.4, and 2.2.9 and do not yield permanent mechanical deformation or any damage that renders the unit inoperable when subjected to a shock of 10 g applied in each of three mutually perpendicular planes for 30 minutes.

   c. Comply with IEC 60529 Section 14.2.6 for IP66 or greater rating.

   d. Comply with NEMA 250, Type 4X corrosion requirements for salt environments (i.e., coastal regions).

   e. Provide CCTV camera system that when installed on a strain pole that meets the requirements specified in Section 639.2.

   f. Provide CCTV camera system including the CLD system (if required) that can withstand wind forces of 100 mph (161 kph) with a 20% gust factor and a 1.65 safety factor.

   g. Provide the following EMC emission approvals:

      i. FCC Part 15, Subpart B, Class A and FCC Public Notice 2019-01.

      ii. IEC EN 61000-6-4

936.2.02 Not Applicable

936.2.03 Camera Mounting Arm

A. Provide camera mounting arm that with the CCTV camera system attached can withstand wind forces of 100 mph (161 kph) with a 20% gust factor and a 1.65 safety factor.

B. Provide camera mounting arm with the proper mating mounting mechanism for the CCTV camera type shown in the Contract.

C. Provide camera mounting arm as shown in the Contract. Measure horizontal separation from the face of pole or mast arm to the centerline of the camera mounting mechanism.

1. For Type 1, short arm, mount camera at a position between 1.5 ft. (450 mm) and 2.5 ft. (750 mm) horizontal separation from the pole, and less than 6 in. (150 mm) vertical change from the pole attachment point.
2. For Type 2, long arm, mount camera mounting at a position between 15 ft. (4.6 m) and 20 ft. (6.1 m) horizontal separation from the pole, and less than 5 ft. (1.5 m) vertical change from the pole attachment point.
3. For Type 3, short vertical extension, mount camera at a position between 2 ft. (0.6 m) and 4 ft. (1.2 m) of vertical change from the attachment point, and less than 2 ft. (0.6 m) of horizontal separation from the attachment point. The attachment point may be a vertical pole or horizontal pole with a dimension ranging between 2 in. (51 mm) and 24 in. (600 mm).
4. For Type 4, long vertical extension, mount camera at a position between 4 ft. (1.2 m) and 8 ft. (2.4 m) of vertical change from the attachment point, and a variable distance of horizontal separation from the attachment point. The attachment point may be a vertical pole or horizontal pole with a diameter dimension ranging between 2 in. (51 mm) and 24 in. (600 mm).

936.3 Construction

The construction and installation of the CCTV camera equipment, materials, components, and assemblies as specified herein shall meet the requirements in this section and the CCTV manufacturer's requirements and recommendations.

936.3.01 Construction Requirements

A. General Construction

1. Mount the camera system assembly and the mounting bracket arm at the cardinal direction and height as shown in the Contract, and so that the pole is not obstructing the camera's view of the roadway or traffic signals.
2. Install cables between the camera system assembly and the field cabinet inside new hollow steel or metal or concrete support poles unless otherwise specified. Where devices are installed on existing wood poles, install cabling on the wood poles in conduit risers of a minimum 2 in. (51 mm) diameter.
3. Provide wiring and cabling that meets the following minimum requirements:
   a. Provide between 3 ft. (0.9 m) and 5 ft. (1.5 m) of coiled slack cable in the bottom of the field cabinet.
   b. Route CCTV cables in the cabinet separate from any 120 VAC power wiring or surge suppressor ground wiring.
   c. Provide CCTV cables of 330 ft. (100 m) maximum length in accordance with IEEE 802.3
   d. Neatly arrange and dress wiring, firmly lace or bundle it, and mechanically secure the wiring without the use of adhesive fasteners.
   e. Organize cables neatly inside the field cabinet and secure cables with clamps to minimize movement in the wind and chafing against the pole, device, or bracket.
   f. Provide service loops at connection points when connecting to hardware inside the field cabinet.
   g. No splicing of cables or exposed wiring is permitted.
   h. Provide wiring entry to the camera casing or enclosure that uses weathertight fittings.

i. Provide wiring entry and exits that are made at the side or underneath components; no exposed top entry or exits are permitted. This requirement extends to enclosures, junction boxes, support arms, or any other externally exposed devices.

j. Route and secure wiring and cabling to avoid sharp edges and to avoid conflicts with other equipment or cabling.

k. Label all wiring with printed, legible, and water-resistant labels firmly attached to the wire.

4. Coordinate with the Department to establish electrical utility service according to the NEC and as specified in Section 682.

   a. Verify with the local power service provider to ensure that the provided equipment is compatible with the installed equipment.

   b. Contractor shall be responsible for paying for electrical service as required from the time of testing up to the issuance of the Maintenance Acceptance Letter (MAL) by the Department at which time the service provider account shall be transferred to the Department.

5. Comply with NEC requirements and Section 682 for grounding and bonding requirements.

6. Dress and route grounding wires separately from other field cabinet wiring and with the minimum length possible between the surge protector and the ground buss-bar.

7. Do not splice any cable, shield, or conductor used for CCTV camera operation, communications signaling, power supply, or grounding.

B. Not Applicable

936.3.02 Equipment Configuration and Integration Requirements

Refer to Section 942.3 for equipment configuration and integration requirements.

936.3.03 Testing Requirements

Refer to Section 942.3 for testing requirements.

936.3.04 Training

Refer to Section 942.3 for training requirements.

936.3.05 Warranty and Maintenance Support Services

A. Warranty

1. Provide a minimum warranty length as follows. If the manufacturer's warranties for the components are for a longer period, those longer period warranties shall apply.

   a. CCTV camera assembly and associated components: three years.

   b. Category-6 PoE surge protector: five years.

   c. Not Applicable

2. Refer to Section 942.3 for general warranty requirements.

B. Maintenance Support Services:

Refer to Section 942.3 for maintenance support services requirements.

936.4 Measurement

The CCTV camera system and training that are complete, in place, accepted, and of the kind, size, and type specified will be measured as follows:

A. CCTV Camera System, Types 1, 1P, 2, 2P, 3, 3P

The CCTV camera system will be measured for payment by the type and number installed, complete, functional, tested, and accepted, including IP-based camera assembly with internal video encoder, camera lens, P/T positioning drive, camera

casing or enclosure, sunshield, and mounting bracket. CCTV camera system shall also include components to be installed with field cabinet, including but not limited to, PoE injector, outdoor-rated cabling and associated wiring, network patch cable, connectors, terminal blocks, surge protector, weather heads (as required or needed), grounding to site ground, and video encoder configuration.

B. Camera Mounting Arm, Types 1, 2, 3, 4

The CCTV camera system mounting arm will be measured for payment by the mounting method or type and number installed, complete, functional, tested and accepted. Mounting arm will include the mounting arm, attachment and mounting hardware, work, and all other required or needed materials and incidentals to mount the CCTV camera system.

C. Not Applicable

D. Training

Training will be measured as a lump sum for supplies, equipment, materials, handouts, travel, and subsistence necessary to conduct the training.

936.5 Payment

936.5.01 CCTV Camera System

CCTV camera systems of the type specified in the Contract will be paid for at the Contract unit price. This price will include full compensation for labor, materials, equipment, tools, test equipment, incidentals, installation, testing, and providing warranty necessary to complete the CCTV camera system.

Payment Notes:

Submittal

Submittal requirements are included in Section 942.1 and will not be paid for separately. It will be considered as incidental to the CCTV camera system pay item.

Testing

Testing is defined in Section 942.3.04 and will not be paid for separately. It will be considered as incidental to the CCTV camera system pay item.

Field Cabinets

New field cabinets used for CCTV components will be paid for separately under Section 939.5 pay items.

Support Structure

Support structure including poles will be paid for separately under Section 639.5 pay items:

GDOT Central Software Integration

GDOT Central Software integration is included in Section 942.3 and will be paid for under the Section 942.5 pay item.

Broadband Wireless Routers

Broadband wireless routers will be paid for separately under the Section 926 pay item.

Payment for the CCTV camera system will be made under:

Item No. 936	CCTV Camera System, Type __	Per each
Item No. 936	Camera Mounting Arm, Type __	Per each
Item No. 936	Camera Lowering Device	Per each

936.5.02 Training

Payment for training will be made under:

Item No. 936	Training	Lump sum

936.5.03 Adjustments

Refer to General Provisions 101 through 150.

Revised for Cobb County

Section 937 – Detection Systems

937.1 General Description

This section contains the requirements to furnish, install, test, and provide warranty and training for detection systems comprised of equipment and materials as specified herein and shown in the Contract.

937.1.01 Definitions, Acronyms, and Abbreviations

A. Definitions

Refer to Section 942.1 for a list of additional definitions and terminology used in this section.

1. **Cabinet Input File:** a standardized chassis within a CalTrans cabinet that has slots for detector cards that provide detector output (contact closure) to the controller through an edge card connector.
2. **Continuous Count Station:**
   a. **Axle Weight:** the measured sum of all tire loads of a vehicle axle.
   b. **Gross Weight:** the total vehicle weight as derived from the measured sum of all tire loads of a single vehicle.
   c. **Vehicle Classification:** assignment of vehicle type to each vehicle that crosses a detector, as defined by the Traffic Monitoring Guide, FHWA, Appendix C.
   d. **Vehicle Speed:** calculated average value of vehicle velocity that crossed a detector within a user-selected period of time.
   e. **Vehicle Volume:** number of vehicles crossing a detector within a user-selected period of time.
3. **Controller Cabinet:** a cabinet for traffic signal applications.
4. **Field Cabinet:** a cabinet for ITS applications.
5. **Freeway:**
   a. **Roadway Occupancy:** time that a detector held a presence call as a percentage of the total time within a user-selected period of time.
   b. **Vehicle Speed:** calculated average value of vehicle velocity that crossed a detector within a user-selected period of time.
   c. **Vehicle Volume:** number of vehicles crossing a detector within a user-selected period of time.
6. **Inductive Loop Detection System:** a rack-mounted card inserted into the cabinet input file that supplies an electric current to a coil of wire embedded in the travel lane, which measures changes in the inductance (magnetic field) when vehicles pass over the coil of wire.
   a. **Type A:** a rack-mounted inductance loop detector card that sends a contact closure to the controller.
   b. **Type B:** an IP addressable rack-mounted vehicle detector card.
7. Not Applicable
8. **Maintenance of Detection System:** provides the project a means of updating detection zones during multiple lane relocations that may occur during construction phases. A detection system can be repositioned and/or the detection zones can be redefined to support the maintenance of traffic. When identified as a project pay item, the maintenance of detection shall begin when existing detectors or detection system is rendered inoperable by construction activities until final acceptance. For projects installing new traffic signals, actuation shall be fully operable at the time of signal activation.
9. **Pedestrian Detection System:** A manual push button positioned at pedestrian crossings that actuates a traffic control device controller.

a. **Type A:** a piezo driven solid-state switch used to send pedestrian actuations (contact closures) to the traffic signal controller.

b. **Type B:** an accessible pedestrian detector with electronic control equipment, wiring, mounting hardware, push buttons, and pedestrian actuation signs designed to provide a push button with a raised, vibrating tactile arrow and audible indications for differing pedestrian signal functions.

10. **Radar Detection System (RDS):** uses low power microwave radar beam technology to detect vehicle presence, volumes, occupancy and speed.

    a. **Type A:** a microwave radar unit used for ITS mainline freeway installations.

    b. **Type B:** a microwave radar unit used for traffic signal applications.

11. **Temporary Detection System:** provides temporary actuation via a non-invasive detection system for projects. The contractor will be responsible for installing, maintaining, and removing the temporary detection system.

12. **Traffic Monitoring Program:** the Department's state-wide vehicle traffic data collection system, which includes continuous count stations; the program includes data collection of vehicle classification, vehicle volume, vehicle speed, and vehicle weight.

13. **Traffic Signal:**

    a. **Detection:** Identification of a motor vehicle passing over an in-pavement sensor or equivalent non-intrusive system actuation zone and delivery of a contact closure or Synchronous Data Link Control (SDLC) data input to the controller.

    b. **Pulse Mode:** The actuation starts with the arrival of the vehicle to the detection zone and ends after a fixed duration contact closure.

    c. **Presence Mode:** The actuation starts with the arrival of the vehicle to the detection zone and ends when the vehicle leaves the detection zone.

14. **Video Detection System (VDS):** captures and processes video images to detect the presence of vehicles, vehicle counts, vehicle classification, detector occupancy, and/or speed information.

    a. **Type A:** a visual spectrum camera capable of capturing the images within the range of wavelengths of electromagnetic radiation normally visible to the human eye, which is typically between 380 nm and 760 nm.

    b. **Type B:** an infrared sensor that detects and converts infrared energy (heat) into an electronic signal and processed as a thermal image (video).

15. Not Applicable

B. Acronyms and Abbreviations

Refer to Section 942.1.01.B for a list of additional acronyms and abbreviations used in this section.

937.1.02 Related References

A. Standard Specifications

Section 150 – Traffic Control

Section 500 – Concrete Structures

Section 647 – Traffic Control Signal Installation

Section 682 – Electrical Wire, Cable, and Conduit

Section 691 – Weigh-in Motion Scale System

Section 833 – Joint Fillers and Sealers

Section 925 – Traffic Control Signal Equipment

Section 939 – Communications and Electronic Equipment

Section 942 – ITS General Requirements

B. Referenced Documents

Refer to Section 942.1 for a list of additional definitions and terminology used in this section.

937.1.03 Submittals

For traffic signal applications, follow Section 647 for submittal requirements, construction procedures, maintenance guidelines, warranty, acceptance, and training requirements.

For ITS and continuous count stations applications, follow Section 942 for submittal requirements, construction procedures, maintenance guidelines, warranty, testing, acceptance, and training requirements.

937.2 Materials

937.2.01 General

A. Cabinet and Controller Interface

1. For vehicle actuation, provide one of the following interface methods:
   a. Provide system with edge card equipment that provides contact closures to the controller, in conformance with the traffic signal controller specifications in Section 925.
   b. Provide SDLC interface that provides the traffic signal controller with vehicle actuation data.
2. For pedestrian actuation, provide system with edge card equipment that provides contact closures to the controller, in conformance with the controller cabinet assembly standards in Section 925.
3. Continuous count station applications shall not require an interface with a traffic signal cabinet or controller.

B. Environmental

1. Provide devices that meet performance requirements before, during, and after being subjected to the environmental requirements detailed in NEMA Standard Publication TS 2-2016, Section 2.
2. All equipment assemblies outside of the controller or field cabinet shall be placed in a NEMA Type 3R or 4x enclosure, unless specified otherwise in this section.
3. All equipment shall meet or exceed the temperature and humidity limits per NEMA TS2-2003 requirements.

C. Frequency

1. Provide device that complies with the limits of a Class A digital device, pursuant to FCC Part 15.
2. Verify that the detector system meets FCC requirements.

D. Electrical

1. Provide equipment located inside the cabinet that operates on nominal 120 VAC. If a device does not operate on 120 VAC, the converter shall be included at no cost to the Department.
2. Equipment external to the cabinet shall operate at 50 V or less.

937.2.02 Network System Requirements

A. General

1. All equipment and equipment applications shall meet MUTCD requirements.
2. All vehicle and pedestrian detection systems shall be supplied with wiring diagrams to convey proper installation of equipment. The drawings shall be provided with the project documentation to the Department.
3. Emergency Vehicle and Railroad Pre-emption
   a. When traffic signal pre-emption is used, coordinate with the railroad, fire department, or any other agency that uses pre-emption to obtain pre-emption output and route output cable to the signal controller operating the intersection to be pre-empted.
   b. Obtain all permits and approval for crossing at=grade or grade separated railroad facility.

B. Accuracy Requirements

1. Provide detection system that meets the accuracy requirements listed in Tables 1, 2, and 3.

Table 1 – Minimum Accuracy Requirements for Traffic Signal Applications		
Application	**Accuracy**	
Pedestrian Detection (Push button)	100%	
Stop Bar Detection Detection Zone Range: 6 ft. x 20 ft. (1.8 m x 6.1 m) to 6 ft. x 40 ft. (1.8 m x 12.2 m) Inductance Loops or Equivalent	99% Presence Mode	
Stop Bar Supplemental Data, System Detection applications Detection Zone: 6 ft. x 6 ft. (1.8 m x 1.8 m) Inductance Loops or Equivalent	92% Presence or Pulse Mode	
Set Back or System Detection and Data Detection Zone: 6 ft. x 6 ft. (1.8 m x 1.8 m) Inductance Loops or Equivalent	99% Pulse Mode	
	During Amber and Red Intervals	During Green Interval
Response Time (85th percentile)	Less than 1 second	Less than 100 ms
Response Time (100th percentile)	Less than 5 seconds	Less than 500 ms
False Call Duration	Less than 500 ms	Less than 500 ms
Number of Missed Calls	Less than 1% per 24 hours	Less than 4% per 24 hours
Number of False Calls	Less than 3% in 24 hours	

Table 2 – Minimum Vehicle Accuracy Requirements for Freeway Applications			
Application	**Volume Accuracy**	**Occupancy Accuracy**	**Speed Accuracy**
Detection Zone: 6 ft. x 6 ft. (1.8 m x 1.8 m) Inductance Loops or Equivalent	90%	90%	90%

Table 3 – Minimum Accuracy Requirements for Continuous Count Station Applications	
Application	**Accuracy**
Vehicle Classification	95%
Vehicle Volume	90%
Vehicle Speed	90%

2. Not Applicable
3. The definition of accuracy is provided in this section for each system function.
   a. Detection
      i. The total number of detected vehicles identified and tabulated as individual events, for stop bar and set back detectors or detection zones.
      ii. The total number of unique actuation events, identified and tabulated as individual events, shall not deviate from the number of actuation events by more than the minimum system accuracy percentage. The deviation represents the total of the over-counting and the under-counting actuation events, representing the absolute value of the deviation.
   b. Vehicle Binned Data Collection Functions
      i. Each vehicle shall be defined as an individual event.
      ii. The total number of unique events, identified and tabulated as individual events, shall not deviate from the actual events by more than the minimum system accuracy percentage. The deviation represents the total of the over-counting and the under-counting actuation events, representing the absolute value of the deviation.
      iii. Speed shall be defined as the measured velocity of each event in mph.
      iv. Occupancy shall be defined as the measured amount of time each event occupied the detector or detection zone.
   c. Vehicle Classification
      i. Each vehicle shall be defined as an individual event and assigned to a vehicle classification as defined by FHWA.
      ii. The total number of unique events, identified and tabulated as individual events, shall not deviate from the actual events by more than the minimum system accuracy percentage. The deviation represents the total of the over-counting and the under-counting actuation events, representing the absolute value of the deviation.
   d. Vehicle Weight
      i. Gross weight: see Section 691 for accuracy requirements.
      ii. Axle weight: see Section 691 for accuracy requirements.
4. Network System Requirements
   a. Applications
      i. Traffic signal applications work includes devices or subsystems of the network and the Department's traffic signal system platform.
      ii. Freeway applications work includes devices or subsystems of the network and the Department's ATMS platform.
      iii. Continuous count station applications work includes devices and the Department's Traffic Monitoring Program system platform.
   b. General network requirements include:
      i. Provide a networking functionality that complies with IEEE 802.3, 802.3u, and 802.3x; 10/100 Mbps or higher, auto sensing full or half-duplex operations.
      ii. Provide network hardware interface including a minimum of one 10BASE-T/100BASE-TX PoE Ethernet-port using an IP66 rated RJ-45 weathertight connector and coupler or other Ethernet- compatible locking weathertight connector and coupler.
   c. Include an RJ-45 Ethernet port on the front panel to program the equipment.

C. Network IP addressing Capability Requirements

1. For detection systems that require IP addressable devices per Section 937:
   a. Provide Domain Name System (DNS) capability.
   b. Support both fixed IP addresses and dynamically assigned IP addresses provided by a DHCP server.
   c. Support static management interface IP addressing.
   d. The detection system shall be IP-addressable and communication addresses shall be user- programmable.
   e. The detection system processor shall enable a remote user with a standard web browser to gain remote access, collect data, and control and configure the detection system.
2. For detection systems that are not required to provide IP addressable devices per Section 937:
   a. The Contractor may elect to provide IP addressable devices. An example is self-tuning vehicle detectors for inductance loops. In these cases, the IP addressing capability requirements apply.
   b. See Contract for additional project requirements.
3. Continuous count station system
   a. Provide IP addressable device that complies with the networking requirements for the Department's Traffic Monitoring Program.
   b. See Contract for additional project requirements.

D. System Software Requirements

1. Verify the firmware and software furnished and installed as part of any detection system is the most current and approved releases or versions, unless otherwise requested by the Department.
2. For detection systems that are not required to provide system software per Section 937:
   a. The Contractor may elect to provide system software. In these cases, the system software requirements apply.
   b. See Contract for additional project requirements.
3. For detection systems that require system software per Section 937:
   a. Provide capability to operate on a Microsoft Windows operating system.
   b. Provide software and firmware updates through an Ethernet or USB port. Verify that data can be retrieved from the system locally and remotely.
   c. Provide system that provides an open API and SDK for the Department to integrate with the network or other third-party software and systems.
   d. Provide software that has the capabilities for the user to automatically and manually reset, reprogram, calibrate, operate, and view status of system features.
   e. Provide software capable of performing tasks using direct connection or network-connected workstation.
   f. Provide software that communicates concurrently between multiple users and multiple detection processors on the same network without interruptions or conflicts with the normal polling cycle.
   g. Provide software with administrative capabilities including creation of user accounts and passwords for access to device setup and settings.
   h. Provide processor with non-volatile memory enough to store all system detection zones settings and two weeks of binned data.
   i. Provide capability to create detection zones of varying size and shape to provide the best coverage of the viewable roadway lanes and ramps.

j. Provide the following capabilities for the user to view the currently active detector zones via the software:

i. Confirmation: When viewing real-time vehicle actuations on the monitoring device, indicate the passage or presence of each vehicle detected for each detection zone by changing the color or intensity of that zone.

ii. Detection During Reconfiguration: The detection system shall be able to continue detecting vehicles on existing zones during reconfiguration, and switch to updated zones upon saving new settings.

iii. Enable the user to define the contents of binned data that is transmitted through the network.

iv. User-selected settings for detector count periods and detector zone sensitivity.

v. Verify the detection system configuration data can be uploaded and saved to a computer over the network for later re-loading to the video detection processor, if necessary.

4. Continuous count station system

a. Provide system that is compatible with the Department's Traffic Monitoring Program platform.

b. Verify that the data generated by the continuous count station is displayed correctly and seamlessly integrated with the Department's Traffic Monitoring Program platform.

937.2.03 Inductance Loop Detection System

A. General

1. The inductance loop detection system shall include components needed for the applications and locations shown in the Contract.

2. Not Applicable

3. Detector Card Types

a. Type A: a rack-mounted inductance loop detector card that sends a contact closure to the controller; detector card does not have an IP address.

b. Type B: an IP-addressable rack-mounted vehicle detector card.

B. Environmental

1. Provide documentation from an independent laboratory certifying the unit complies with environmental tests, transient tests, and size requirements of:

a. NEMA TS 1-1989 Section 15.

b. NEMA TS 2-2021 Section 6.5.

c. CalTrans Type 2070 Specifications.

C. Equipment

1. Configure for rack mount insertion into a CalTrans Type 2070 cabinet input file.

2. Loops

a. Typical loop configurations are:

i. 6 ft x 6 ft (1.8 m x 1.8 m) [dipole]

ii. 6 ft x 20 ft (1.8 m x 6.1 m) [dipole]

iii. 6 ft x 40 ft (1.8 m x 12.2 m) [dipole or quadrupole]

b. Loop lead-in cable lengths range between 5 ft (1.5 m) to 1,500 ft (457 m).

3. Splices

a. Use materials compatible with the sheath and insulation of the loop cable.

b. Insulate inductance loop splices in accordance with standard detail drawings.

D. Requirements

1. Each channel shall include two indicators: one for the detect state and the second to indicate the status of the fault monitor.
2. Tuning
   a. Supply units that are fully digital and self-tuning.
   b. Each channel shall automatically tune the loop and lead-in combination within 2 sec of application of power or reset signal.
   c. The tuning circuit shall not be affected by drift, caused by environmental changes or changes in applied power, and cause false actuations.
3. Scanning
   a. Units shall sequentially scan each channel (only one channel energized at any given time) to:
      i. Eliminate crosstalk from multiple loops in adjacent lanes.
      ii. Enable overlapped loops for directional control.
      iii. Enable use of multi-conductor homerun cable connected to the same detector unit.
4. Each channel shall be equipped with front panel selectable sensitivity settings for presence and pulse modes.
5. Units shall have a minimum of three switch selectable operating frequencies.
6. Each channel shall tune to an inductive load from 50 to 2,000 μH with a Q factor >5.
7. Each channel shall continue operating with poor quality loop systems (Q>2) including those that have a single point short to ground.
8. Fault Monitoring
   a. Units shall continuously monitor the operation of each channel.
   b. The unit shall detect shorted loops, open circuit loops, or sudden changes in inductance (>25% of nominal).
   c. Verify that each type of fault is indicated on a fault LED by a unique sequence of flashes until the fault is rectified.
   d. Verify that while the channel is in the fault condition the channel output remains in the detect state.
   e. When the fault is rectified, the fault LED continues to emit the sequence signifying the last fault detected, but the detect LED and output returns to normal operation.
9. Failsafe Output
   a. Verify that each channel output generates a continuous solid-state output to the controller when power to the detector is removed.
10. Operational Modes
    a. Supply units with each channel selectable for either pulse or presence modes and that meet the following requirements:
       i. Pulse Mode
          a) This setting provides a single output pulse (125 ms ±25) in response to a vehicle entering the loop.
          b) If a vehicle remains in the sensing zone in excess of 2 sec, the unit “tunes out” said vehicle.
          c) The channel is then capable of detecting another vehicle entering the same detection zone.
       ii. Presence Mode
          a) The presence hold time is a minimum of 4 minutes for small vehicles (motorcycles) and a minimum of 60 minutes for automobiles.
          b) Unit shall tune out continuous peak hour traffic over long or multiple small loops if there is vehicle motion in the sensing zone every 10 minutes.

11. Resets
    a. Verify that the channels are manually resettable by removing the power momentarily.
    b. Verify that the channels reset remotely when the voltage on Pin C falls below 8 VDC for a period >l5 ms, and that the unit resumes normal operation within 4 sec after the application of power or after a reset signal of l5 ms.
12. Field Tuning
    a. Verify that field adjustments to the operation of the detector do not require the use of a meter, circuit changes, special software or substitutions, modifications, or additions to the unit.

E. Functional Requirements

1. Provide capability of detecting passage and holding presence and accurately counting all types of licensed motor vehicles when connected to a 6 ft. x 6 ft. (1.8 m x 1.8 m) loop and lead-in without detecting vehicles in adjacent lanes.
2. Provide capability of responding to an inductance change of 0.02% and sensing vehicles at speeds of up to 80 mph (130 kph).
3. Provide capability to not detect vehicles, moving or stopped, at distances greater than 3 ft. (0.9 m) for the loop perimeter.

937.2.04 Pedestrian Detection System

A. General

1. The pedestrian detection system shall include components needed for the applications and locations shown in the Contract.
2. Push button Types
    a. Type A: standard
    b. Type B: accessible
3. IP addressable device capabilities or software are not required unless specified in the Contract.

B. Environmental

1. Provide housing that meets NEMA 250-6P for prevention of water and dust intrusion.

C. Equipment

1. Housing
    a. Provide housing free of voids, pits, dents, and excessive grinding marks. Exterior surface shall be smooth and cosmetically acceptable, free of molding fins, cracks, and other exterior blemishes.
    b. Provide housing and cover with a chromate conversion coating to provide a proper base for paint adhesion. The housing shall be finished with baked enamel finish power coating or paint in highway yellow.
    c. Provide mounting assembly that can be mounted to a flat or curved surface.
    d. Provide stainless steel and vandal proof screws and/or bolts. The unit with a 0.5 in. (13 mm) threaded opening shall have a plug furnished.
    e. Route all wiring within the pole and through the assembly bracket.
2. Push button (all types)
    a. Provide pedestrian push buttons with a piezo driven solid-state switch in a vandal resistant cast aluminum housing.
    b. Provide button that is pressure activated with no moving parts.
    c. Provide switch that meets the following requirements:
        i. Switch rated for 100 million cycles.

ii. Push button shall be actuated by a force of 3 lbs. (1.36 kg) or less.

3. Push button Station
   a. Screws or bolts shall be stainless steel and vandal proof.
   b. Provide the unit with a 0.5 in. (13 mm) threaded opening with plug.
   c. Verify that the assembly is weathertight.
   d. Assembly shall have transient surge protection compliant with NEMA TS2-2021.
4. Push button Sign
   a. Provide MUTCD signs as shown in the Contract.
   b. Provide sign adapter plate that has a separate, die-cast aluminum part that is interchangeable.
   c. Sign adaptor plates shall be provided with one of the following configurations as specified in the Contract:
   d. A 9 in. (229 mm) by 15 in. (381 mm) cast aluminum plate adapter for upgrading existing push button stations with 9 in. (229 mm) by 12 in. (305 mm).
   e. A 9 in. (229 mm) by 15 in. (381 mm) cast aluminum plate adapter to upgrade existing push button station, 5 in. (127 mm) by 7 in. (178 mm).
   f. A 9 in. (229 mm) by 15 in. (381 mm) sign with round push button adapter for new installations at traffic control signals, except for RRFB installations.
   g. A 9 in. (229 mm) by 12 in. (305 mm) sign with round push button adapter for RRFB applications only.
   h. The pedestrian push button sign adapter assembly shall be attached, prior to shipping.

D. Electrical

1. Provide transient suppression that meet IEC 61000-4-4 and IEC 61000-4-5.
2. Provide lightning and power protection that meets the following:
   a. GR-1089-CORE
   b. 6000v-400A, 25 reps 120 VAC-15 minutes

E. Requirements

1. Type A push button
   a. Provide button cap that is 2 in. (52 mm) in diameter and made of 316 stainless steel.
   b. Provide push button with audible response upon actuation.
      i. Audible actuation confirmation tone for push actuation shall be between 3.2 and 3.8 kHz.
      ii. If an audible actuation confirmation tone for button release is available, it shall be between
      iii. and 2.7 kHz.
      iv. Audible actuation confirmation tones shall last a minimum of 50 ms and not exceed 150 ms.
      v. Audible actuation confirmation tones shall not exceed 75 dB at 3.3 ft. (1.0 m).
   c. Provide push button with actuation confirmation light.
      i. Detection confirmation light shall be red.
      ii. Detection confirmation light shall have a viewable angle greater than 120 degrees.
      iii. Detection confirmation light shall have momentary and latching options.
   d. Detection confirmation light luminosity shall be a minimum of 0.25 Lux measured at 3.3 ft. (1.0 m).

2. Type B push button
   a. Provide accessible pedestrian detector electronic control equipment, wiring, mounting hardware, push buttons, and pedestrian actuation signs designed to provide a push button with a raised, vibrating tactile arrow and audible messages and locator tone for differing pedestrian signal functions.
   b. Electronic Control Equipment
      i. Install in a traffic controller cabinet or pedestrian signal housing.
      ii. Provide up to 16 detectors (4 maximum per channel) in a single traffic controller cabinet.
   c. Audible Messages
      i. Provide capability for programmable audible messages.
      ii. All audible messages and tones shall emanate from the accessible pedestrian push button housing.
      iii. Accessible Pedestrian Detector shall use digital audio technology.
      iv. Provide a minimum of three programmable locator tones.
      v. Provide Accessible Pedestrian Detector with independent minimum and maximum volume limits for the locator tone, walk, and audible beaconing features.
      vi. Provide the annunciated “Wait” message once per actuation.
   d. Push button Locator Tone
      i. Provide Accessible Pedestrian Detector independent ambient sound adjustment for the locator tone feature.
      ii. Locator tone have a volume range of 30 to 100 dB measured at 3 ft. (0.9 m) from unit.
      iii. Provide capability to deactivate the Accessible Pedestrian Detector locator tone.
   e. Vibrating Tactile Button
      i. Provide a single assembly containing an ADA-compliant and vibrating tactile directional arrow button, weatherproof audible speaker, and pedestrian actuation sign with optional placard Braille messages.
      ii. Provide color-contrast tactile arrow that is 2 in. (52 mm) in length and field adjustable to two directions.
   f. Conflict Monitoring
      i. Provide monitoring for the Accessible Pedestrian Detector “Walk” condition for conflict operation.
      ii. Provide capability to disable the “Walk” functionality if a conflict is detected.
   g. Cabinet Control Unit
      i. Provide interface and connection to the traffic signal controller.
      ii. Provide LED indicators for each channel operation.
      iii. Provide capability to automatically reset upon loss of internal communication.

937.2.05 Video Detection System

A. General

1. Provide video detection system for the application as shown in the Contract.
2. Types
   a. Type A: visual spectrum camera
   b. Type B: infrared sensor

B. Environmental

1. Provide a provision at the rear of the camera enclosure for a weathertight power and video signal cable connection over a single weathertight connector.

2. Power and video connections may be provided on the bottom of the camera enclosure as an alternative.

C. Equipment

1. Camera types
   a. Type A, Visual Spectrum Camera
      i. Video camera sensor optics shall compensate for variations in lighting and weather conditions, including blooming caused by headlights and minor vibration caused by wind.
      ii. VDS shall enables user to select video resolution with a minimum resolution of 720P (1280x720 lines) video output.
   b. Type B, Infrared Sensor
      i. The camera shall be capable of sending thermal video image from the internal video camera sensor to the processor for real-time vehicle actuation.
      ii. VDS shall enable user to select video resolution with a minimum resolution of 480P (640x480 lines) video output.
2. Camera Assembly
   a. CMOS shall comply with Advanced Television Systems Committee Standard H.264 or NTSC standards with a H.264 or H.265 option. Camera provides full color/motorized zoom focus control with auto focus and manual focus override.
   b. The camera shall have a minimum 10x optical and minimum 1.5x digital zoom.
   c. The camera shall have a direct, real-time iris, and shutter speed controlled by the integrated processor.
   d. The camera shall operate at 30 frames per second (fps) regardless of resolution.
   e. It shall be possible to adjust lens zoom remotely over the network for temporary traffic surveillance operations or to inspect the faceplate cleanliness.
   f. The sensor shall have provisions to prevent ice and condensation. Condensation prevention equipment shall not interfere with the video camera sensor operation or cause video signal interference.
3. Cabinet
   a. Freeway Field Cabinet Mounting
      i. The IP-addressable IVDS processor shall be shelf or rack mountable.
      ii. IVDS processor shall support mounting and operation in an enclosed field cabinet or hub building without blower fans and without insulation from other electronic devices such as power supplies and communications equipment.
      iii. Verify video inputs are provided on the IVDS processor such that signals from one video camera sensor or other synchronous or non-synchronous video source can be processed in real time.
   b. Traffic Control Signal Cabinet Mounting
      i. Provide an IP addressable processor module that performs video image processing and encoding.
      ii. Processor shall fit standard CalTrans cabinet input file and provide a standard contact closure (input) to the controller.
      iii. Provide one to four detector outputs through the processor module that communicate through the edge card connector. Use a module that is no wider than two standard input file slots.

D. Electrical

i. Provide power from the controller or field cabinet power source through a manufacturer supplied or recommended surge suppressor to the video camera sensor.

E. Requirements

1. Mount the processor and expansion modules in the traffic signal cabinet input files using the edge card connector for power and to provide contact closure outputs.
2. Detection zones
   a. Provide capability to emulate the output of consecutive 6 ft. by 6 ft. (1.8 m by 1.8 m) in-pavement loops spaced 8 ft. (2.4 m) apart for stop bar applications at traffic signals.
   b. Provide capability to emulate the output of in-pavement loops ranging from 6 ft. by 20 ft. (1.8 m by 6.1 m) to a 6 ft. by 50 ft. (1.8 m by 15.2 m) for stop bar applications at traffic signals.
   c. Provide a minimum of 16 detection zones with one video camera sensor.
   d. Enable multiple detection zones to be combined onto a single channel.
3. Provide VDS processor front panel that includes the status of the following:
   a. VDS processor (online).
   b. Network communications (transmit/receive).
   c. VDS processor to camera assembly communications.
   d. Active detections for each video camera assembly.

F. Functional Requirements

1. Provide processor with non-volatile memory enough to store all system detection zones settings and two weeks of binned data.
2. Provide capability to display detection zones superimposed on the camera sensor images on a monitoring device and centralized video system.
3. Provide vehicle presence, speeds, counts, and roadway occupancies on a lane-by-lane basis based on the application as shown in the Contract.
4. Verify that the system responds with the accumulated binned traffic data collected since the last data request with no gap in data.
5. Provide processor equipped with video stabilization to compensate for camera movement attributable to temperature effects, wind shifting, pole sway, pole expansion, or vibration.

937.2.06 Radar Detection System

A. General

1. The RDS shall include components needed for the applications and locations shown in the Contract.
2. Types
   a. Type A: Typically used for ITS mainline freeway installations.
   b. Type B: Typically used for traffic signal installations.
3. Frequency
   a. Provide device that transmits on a 24 GHz frequency or another approved spectral band.
   b. Provide device that does not interfere with known equipment or coverage area.

B. Environmental

1. Provide device that is resistant to vibration in accordance with NEMA TS-2 2021 requirements.
2. Provide device that is resistant to shock in accordance with NEMA TS-2 2021 requirements.
3. Provide cables with weather-proof connections and shielded as required by manufacturers' recommendations.

C. Equipment

1. Mounting assembly
   a. Provide mounting assembly that is constructed of coated steel, stainless steel, or aluminum.
   b. Provide mounting assembly capable of supporting a minimum load of 20 lbs. (9.1 kg).
   c. Provide mounting assembly with a mechanism that can be tilted on both axes and locked into place.
2. Cables
   a. Provide connection between the RDS and the controller or field cabinet equipment using a single cable.
   b. No splices are permitted in any cable. The cable shall, at a minimum, provide power and the data interface to the RDS unit.
   c. Twisted pairs shall be identified by separate insulation colors. Communications pairs shall be individually or commonly shielded.
   d. Low-voltage power conductors shall not be shielded together with the communications pairs.
   e. RDSS units shall communicate via serial RS-485 or ethernet protocol.

D. Electrical

1. The RDS shall be operable from 12 to 24 VDC.
2. Power supply shall be provided from the RDS communications wiring module in the controller or field cabinet.
3. Alternative power sources and adapters shall be submitted to and approved by the Department.
4. The RDS unit shall include power management features enabling remote shutdown and cyclical shutdown.
5. Electrical Isolation and Surge Protection
   a. The equipment shall meet specified requirements during and after subjecting it to a power surge of ±1 kV (rise time = 1.2 μs, hold = 50 μs) applied in differential mode to lines, power, and output as defined by IEC 1000-4-5 and EN 61000-4-5 standards or NEMA TS2-2021, 300V Transient Voltage Protection.
   b. Power cables, contact closures, and the serial port shall have a surge protector that meets the manufacturer's recommendations.
   c. Isolate the contact closures and the communications port.

E. Requirements

1. General (All Types)
   a. Provide RDS with presence indication of vehicles in its detection zones.
      i. Transmit traffic data, periodically accumulated over user-defined time customizable intervals between 10 to 600 sec.
      ii. Data shall be available simultaneously with detection zone contact closures and network communications. Supply modules as necessary for simultaneous communications.
      iii. Vehicle classification by length in a minimum of three user defined classes. Supplemental detection zones, not used for vehicle actuation, may be used to collect this data.
      iv. Enable the user to define the contents of transmitted data.
   b. Provide hardware suitable for mounting on roadside poles or on overhead structures using an extension arm for Type B due to signal pattern and distance coverage at a mounting height determined by the manufacturer.
2. RDS Type A
   a. Provide capability of a 200 ft. (61 m) range and can accurately detect up to eight lanes of traffic in a single direction.
   b. Provide capability in which the data shall include the following in each of a minimum of eight lanes in one direction and a minimum of sixteen detection zones (lanes) for bi-directional travel:

i. Volume

ii. Lane occupancy

iii. Average speed

3. RDS Type B

a. Provide capability of meeting zone requirements as shown in the Contract and provide actuation outputs that meet the specifications of the controller.

b. Provide capability for a minimum of eight detection zones in a single direction where the farthest lane at ideal mounting height can detect at a minimum distance of 100 ft. (30.5 m).

F. Functional Requirements

1. Provide processor with non-volatile memory enough to store all system detection zones settings and two weeks of binned data.

2. Verify that the traffic data collected by the microwave detection system is stored in internal non-volatile memory.

a. Verify the RDS enables local and remote configuration and monitoring including data retrieval using computers on the network.

b. Verify that the system configuration data and software are also stored within internal non-volatile memory in repeaters.

3. Verify the system enables the user to view live actuations from the microwave detector with the programmed detectors overlaying a representation of the roadway.

4. Verify the microwave detection system configuration data can be uploaded and saved to a laptop or performed over the network to re-load to the processor, if necessary.

5. Verify no periodic adjustments or fine-tuning is required except in the case of physical roadway changes such as lane -shifts, new construction, or closures.

937.2.07 Not Applicable

937.2.08 Continuous Count Station System

A. General

1. The continuous count station system shall include components needed for the applications and locations shown in the Contract.

2. Coordinate with the Department for approval of continuous count station system components not included on the QPL.

3. If weigh-in-motion application is shown in the Contract, see Section 691 for additional requirements.

B. Environmental

1. If in-pavement detection devices are used, the components shall be resistant to vibration in accordance with IEC 68-2-30 (test Fc), NEMA TS 1-1989(Section 2.1.12), or approved equivalent.

2. If in-pavement detection devices are used, the components shall be resistant to shock in accordance with IEC 68-2-27 (test a), NEMA TS 1-1989 (Section 2.1.13), or approved equivalent.

C. Equipment

1. For in-pavement detection devices, provide a detector minimum design life of seven (7) years.

2. Communication

a. Provide an integrated cellular wireless router only as listed on the GDOT QPL and as approved by the Department's current cellular telecommunications service provider.

b. See Section 926 for cellular wireless router requirements.

3. Cabinet

a. Provide NEMA Type 3R cabinet that provide suitable space, ventilation, and light for the equipment that occupies the cabinet, including consideration for system maintenance.

b. Provide clear identification on cabinet with contact details for the maintenance provider and the Department.

4. Access

a. Provide key that is compatible with other continuous count station cabinets.

b. Provide 3 copies of the key to the Department.

D. Electrical

1. If in-pavement sensors are used that require battery power, provide a minimum battery life of seven (7) years.
2. Provide power service per Section 647 or solar power service per Section 925.
3. Provide grounding per Section 647 and 682.

E. Requirements

1. Coordinate with Office of Transportation Data to confirm detector spacing for vehicle speed measurements.
2. If weigh-in-motion application is shown in the Contract, see Section 691 for additional requirements.
3. For inductance loop applications, see Section 937.02.02 for additional requirements.

F. Functional Requirements

1. Provide detection types that provide continuous count station applications and the associated accuracy requirements.
2. Provide detection configuration that supports the continuous count station applications.

937.2.09 Temporary Detection System

Furnish a Temporary Detection System that meets the requirements of this Section.

937.2.10 Maintenance of Detection System

A Maintenance of Detection System, if different than the final detection system specified in the Contract, that meet the requirements of this Section.

937.3 Construction

For ITS and continuous count station devices, additional construction requirements are referenced in Section 942.

937.3.01 General

A. Detection Systems

1. Provide personnel that are certified by the manufacturer to test and pre-configure the components, including assigning channels and sensors to repeaters and access points.
2. Record all detection component ID numbers on a project plan drawing or intersection detail prior to installation, and supply all drawings showing the recordings as part of the as-builts at the end of the project.
3. Submit information as part of the project documentation to the Department.

937.3.02 Inductance Loop Detection System

A. General Installation Requirements

1. Loop wire from the roadway shall be spliced at the first (nearest) pull box to the saw slot. No other splices are allowed.
2. Based on the center line, place the top stop bar loop 2 ft. (600 mm) behind (upstream) the stop bar unless otherwise directed by the Department.

3. Do not place a portion of the loop within 3 ft. (900 mm) of a conductive material in or above the pavement such as a manhole cover, water valves, grates, metal gates, etc.
4. Verify that the ambient pavement surface temperature in the shade is a minimum of 40 °F (4 °C) before cutting roadway and placing sealant into saw cuts. For demand loops, the wiring pattern for the quadrupole pole placement will be followed verbatim per the Quadrupole Wiring Plan on GDOT Standard Detail TS-01A.
5. Wind loop wire clockwise in the saw slot and connect the lead wire to the black wire to make the loop phasing in one direction and connect to the controller or field cabinet input panel to the appropriate detector channel on all odd-numbered terminals.
6. Follow wiring color coding shown in Tables 4 and 5 for traffic control signal applications.

Table 4 – Wiring Standards for Traffic Control Signal Inductance Loop Detectors

Detectors	Phases 3, 4, 7, and 8 Stop Bar Loops		Phases 2 and 6 Setback Loops and Phases 1 and 5 Stop Bar Loops	
	Wire Color	Shielded Loop Lead- in Cable, 3 Pair	Wire Color	Shielded Loop Lead-in Cable, 3 Pair
First Left-Turn Lane from Curb			Red	Red/Black Pair (1)
Second Left-Turn Lane			Green	Green/Black Pair (1)
Third Left-Turn Lane			White	White/Black Pair (1)
Right Curb Lane	Red	Red/Black Pair (1)	Red	Red/Black Pair (2)
Second Lane	Green	Green/Black Pair (1)	Green	Green/Black Pair (2)
Third Lane	White	White/Black Pair (1)	White	White/Black Pair (2)
Fourth Lane	Red	Red/Black Pair (2)	Red	Red/Black Pair (3)
Fifth Lane	Green	Green/Black Pair (2)	Green	Green/Black Pair (3)
Sixth Lane	White	White/Black Pair (2)	White	White/Black Pair (3)
Note: (n) - Number of three-pair shielded cables				

Table 5 – Not Applicable

B. Saw Cuts

1. Outline the loop on the pavement to conform to the specified configuration.
2. Verify each loop has a separate saw cut with a minimum distance between saw cuts of 6 in (150 mm) to the side of the road and its own drilled hole through the curb.
3. Saw cutting a loop lead across a pedestrian ramp or intersection corner radius is prohibited.
4. Use wet saw only cutting inductance loop slots.
5. Cut the detector loop in a saw slot a minimum of 4 in. (100 mm) deep to provide a minimum of 3 in. (75 mm) of depth to the top of the wire.
6. Verify that the slot is a minimum of 0.25 in. (6 mm) wide for stranded No. 14 AWG loop wire, XLPE or XHHW-2, and a minimum of 0.31 in. (8 mm) wide for polyethylene or PVC-encased No. 14 AWG loop wire.
   a. Drill a 2 in. (50 mm) diameter hole or make miter saw cuts in the pavement at the slot intersection, as directed by the Department.

b. Overlap miter saw cuts at the saw cut intersection so that the slots have a full-depth and smooth bottom. Do not make a full triangle cut. Depth shall be uniform.

c. Prevent the wire from bending sharply.

d. Do not install detector loop wire unless sawed slots are completely dry and free of debris. Pressure wash the slot to guarantee adhesion of the loop sealant. Use compressed air to thoroughly clean out and dry the sawed slot with a minimum of 125 psi (8.8 kg/cm2). Handheld or backpack blowers shall only be used to dry the pavement or remove debris away from the saw cut edge.

e. Install the loop wire starting at the nearest pull box or conduit around the loop in a clockwise direction for the specified number of turns, and back to the pull box or conduit.

f. All quadrupole loops shall be wrapped in a clockwise figure eight configuration. See Quadrupole Wiring Detail on GDOT Standard Detail TS-01A.

g. Refer to Standard Detail Drawings for the number of turns to install in the saw slot.

7. Press the wire in the slot without using sharp objects that may damage the jacket.

8. Hold the loop in place every 5 ft. (1.5 m) with 1 in. (25 mm) strips of rubber, neoprene, flexible tubing, or foam backer rod as approved by the Department.

9. Leave the hold down strips in place when filling the slot with loop sealant.

10. Where encased loop wire is used, apply a weathertight seal to the ends of the polyethylene tubing that encases the wire to prevent moisture from entering the tube.

11. Where the loop wires cross pavement joints and cracks, protect the loop wires using the method specified in the Standard Detail Drawings. When crossing expansion joints, drill a 2 in. (50 mm) diameter hole a minimum 4 in. (100 mm) deep or to bottom of saw cut. Do not install loop wires in an expansion joint.

12. Twist loop lead-in four to six turns per foot from the curb to the loop lead-in cable splice or directly to the cabinet. When possible, start the twist of loop wires from the loop's edge in the saw cut to the loop lead-in cable splice, or directly to the cabinet.

C. Saw Cut Sealing

1. After successfully testing each loop, fill the slots with sealant to fully encase the conductors using a one-part loop sealant mixture that requires a caulk gun or similar device. See Section 833.2.

2. Seal the slot only when the pavement is completely dry.

3. Verify that the sealant is a minimum of 3 in. (75 mm) thick above the top conductor in the saw cut.

4. Apply the sealant so that subsequent expansion does not raise the sealant material above the pavement surface.

5. In case of accidental spill, remove surplus sealant from the adjacent road surfaces without using solvents or epoxy sealants before the sealant sets.

6. Remove excess loop sealant to prevent distorting pavement marking reflectivity, color, or shape.

7. When the Department determines that the loop sealant can accommodate traffic, but the surface is tacky, dust the sealer on the pavement surface with cement dust before opening the roadway to traffic.

8. Dispose of the solvents used to clean loop installation equipment according to the manufacturer's specifications and local, state, and federal regulations.

D. Inductance Loop Connections

1. Connect loop conductors to a shielded lead-in cable that runs from the pull box adjacent the pavement edge or conduit to the controller or field cabinet input panel, unless otherwise specified in the Contract.

2. Use a continuous 3-pair,14 AWG shielded lead-in cable from the pull box or conduit to the controller or field cabinet input panel. The 3-pair cable shall not be spliced.

3. Do not bond or ground the shield in the loop lead-in cable at the controller cabinet unless induced voltage is present. If voltage is present, then the shield in the loop lead-in cable shall be bonded to controller cabinet equipment bus bar per NEC.

4. Completely tape back all ground shields inside the shielded lead-in cable on both ends of the cable.
5. Connect each loop to an individual detector channel as specified in the Contract.
6. If the Contract specifies that two or more loops will be operated on the same detector channel or detector amplifier unit, wire them in series to their loop lead-in at the pull box or conduit.
7. Use series-parallel connections when series connections do not meet the manufacturer's specified operating range for the detector amplifier unit.
8. Leave 6 ft. (1.8 m) of wire coiled up in a pull box and make sure the lead wire of each loop is identified inside the pull box.
9. Make weathertight loop wire splices using pill boxes with loop sealant or tape with the following specifications:
   a. Verify electrical tape used is flame retardant, and cold and weather resistant.
   b. Provide tape that is rated for 600 V and for use between 0°F (–18°C) and 176°F (80°C).
   c. Verify tape is 0.0085 in. (0.2 mm) thick and meets the requirements of UL 510 and Mil-I-24391.
   d. Provide tape that remains flexible with abrasion resistance.
10. Splice the loop wire to loop lead-in cable only after the detector system has been tested and demonstrated under live traffic conditions. See standard detail drawings for splicing details.

E. Inductance Loop Maintenance

1. Locate all existing loops, determine the operational status of all loop assemblies, and notify the Engineer prior to commencing loop construction activities at the intersection.
2. Maintain all existing, operational loops, unless otherwise notified by the Engineer. Repair of an existing, non-operational loop prior to beginning work will be considered as extra work.
3. Locate points of conflict between new loops and existing loops and install all new loops and saw cuts so as not to cut existing loop lead-ins and loop wires that are to be retained.
4. If an existing operational loop that is not scheduled for replacement fails during the construction time frame, notify the Engineer and complete the replacement of the damaged loops immediately.
5. Loops that are removed or destroyed as part of a construction, rehabilitation, or maintenance project shall be replaced and returned to full operation.
6. All costs associated with the replacement of the loops damaged during construction shall be the responsibility of the Contractor.

F. Inductance Loop Testing

1. Test each loop after installing the conductors in the slots cut in the pavement and before sealing.
2. Test the loop wire from the controller cabinet assembly spliced to the shielded lead-in wire.
3. If there are no splice points, such as in direct entry to the controller cabinet assembly, test wire at the cabinet.
4. Only perform the tests at the controller cabinet assembly.
5. Record the test results on the Loop Installation Data Sheet in Table 6. Make copies of the data sheet as needed.
6. Include the data sheets in the records and place a copy in the controller cabinet assembly.

Table 6 – Loop Installation Data Sheet	
Location	
Intersection Major Route	District
Intersection Minor Route	City
Intersection (MaxTime) Number	County
Date:	PI Number
Contractor:	Installation/Plan Sheet Number
Weather: Pavement Condition - Wet ( ) or Dry ( )	Temperature:
Intersection Sketch	North
Loop #1	
Phase:	Function:
Size and Type of Loop:	Lane Location:
No. of Turns:	Downstream/Upstream: Down ( ) Up ( )
Loop Wire Color/Insulation Type/Gauge:	Sealant Manufacturer and Lot No.:
Sealant Type and Part Number:	Distance E.O.P/Curb to Lead-in:
Distance from Stop Bar:	Splice Point:
Loop Lead-In Wire Color/Insulation Type/Gauge:	Distance Lead-in Cable:
Conduit Length Curb/E.O.P. to Splice Point:	Conduit Length Splice Point to Cabinet:
Sealant Manufacturer and Lot No.:	
1. Induced Voltage _____ 2. Inductance _____Microhenries	
3. Leakage Resistance to Ground _____megohms 4. Loop Resistance ____ohms 5. Loop Q (Quality) _____ Q	
Comments	

7. Conduct the following tests to evaluate each inductance loop installation before sealing the loop in the pavement:
   a. Induced AC Voltage Test: Read 0.05 VAC or less on a digital voltmeter or no deflection on the pointer of an analog meter.
   b. Leakage Resistance to Ground: The resistance to ground shall be 5 MΩ or more.
   c. Loop Resistance: The resistance reading on an ohmmeter is approximately within 10% of the calculated value. See Table 7 for wire resistance values.

Table 7 – Loop Wire Resistance	
Wire Gauge	Acceptable Resistance DC at 68 °F [20 °C] (+/- 10%)
18 AWG	Approximately 5.5 ohms per 1,000 ft. R = 29.4 µ/mile (or) R = 5.5 x 10-3 µ/ft (R = 18.3 µ/km (or) R=18.3 x 10-3 µ/m)
14 AWG	Approximately 2.52 ohms per 1,000 ft. R = 13.32 µ/mile (or) R = 2.523 x 10-3 µ/ft (R = 8.3 µ/km (or) R=8.3 x 10-3 µ/m)
12 AWG	Approximately 0.98 ohms per 1,000 ft. R = 5.2 µ/mile (or) R = 9.85 x 10-4 µ/ft (R = 3.24 µ/km (or) R = 3.24 x 10-3 µ/m)
Note: Loop Q at 50 kHz shall be greater than 5.	

   d. Inductance: Inductance (I) is measured in microhenries (mH), and the total inductance is equal to the inductance of loop plus inductance of the loop lead-in. Acceptable inductance is within 10% of the calculated value for a single loop with the design criteria listed in Tables 8 and 9.

Table 8 – Dipole Loop Wire Inductance	
6 ft. x 6 ft. (3 turns) [1.8 m x 1.8 m]	I = 76 mH + 23 mH per 100 ft (30 m) lead-in cable
6 ft. x 30 ft. (2 turns) [1.8 m x 9 m]	I = 126 mH + 23 mH per 100 ft (30 m) lead-in cable
6 ft. x 40 ft. (2 turns) [1.8 m x 12 m]	I = 165 mH + 23 mH per 100 ft (30 m) lead-in cable
6 ft. x 50 ft. (2 turns) [1.8 m x 15 m]	I = 205 mH + 23 mH per 100 ft (30 m) lead-in cable
6 ft. x 70 ft. (2 turns) [1.8 m x 21 m]	I = 285 mH + 23 mH per 100 ft (30 m) lead-in cable

Table 9 – Quadrupole Loop Inductance	
6 ft. x 30 ft. (2, 4, 2 turns) [1.8 m x 9 m]	I = 269 mH + 23 mH per 100 ft (30 m) lead-in cable
6 ft. x 40 ft. (2, 4, 2 turns) [1.8 m x 12 m]	I = 349 mH + 23 mH per 100 ft (30 m) lead-in cable
6 ft. x 50 ft. (2, 4, 2 turns) [1.8 m x 15 m]	I = 429 mH + 23 mH per 100 ft (30 m) lead-in cable
6 ft. x 60 ft. (2, 4, 2 turns) [1.8 m x 18 m]	I = 509 mH + 23 mH per 100 ft (30 m) lead-in cable
6 ft. x 70 ft. (2, 4, 2 turns) [1.8 m x 21 m]	I = 589 mH + 23 mH per 100 ft (30 m) lead-in cable

8. Report to the Department an out-of-range reading on any of the above tests. If a test is unacceptable, remove and install new wire. Repeat the test procedure.
9. Include in the test results:
   a. Type and model number of the equipment used (shall be ohmmeter having a high resistance scale of R x 10 kW or greater)

b. The last calibration date of the equipment and the scale used

10. Check the loop using an impedance tester to determine the natural operating frequency and impedance.
11. Verify that the completed units detect vehicles in accordance with prescribed accuracy requirements.
12. Loop Q
    a. Q at 50 kHz is greater than 5.
    b. Report to the Construction Manager or designee an out-of-range reading on any of the above tests. If a test is found unacceptable, remove the loop, install new wire, and repeat the test procedure.
    c. Include in the test results:
        i. Type and model number of the equipment used (must be ohmmeter having a high resistance scale of R x 10 KW or greater)
        ii. The last calibration date of the equipment and the scale used
    d. Check the loop using an impedance tester to determine the natural operating frequency and impedance. Ensure that the completed units detect all motor vehicles. If the loop detection system does not meet the above test requirements, payment will not be made for work on the signal installation until corrections are completed.

937.3.03 Pedestrian Detection System (All Types)

A. Pedestrian Push button

1. Install the push button with a pedestrian instruction sign as illustrated in the Standard Detail Drawings and according to the Contract.
2. Seal all openings to prevent moisture from entering the push button.

B. Pedestrian Push button Cable

1. Use 3-pair shielded lead-in cable for pedestrian push buttons. Install one 3-pair shielded lead-in cable to each pedestrian push button station(s) location to operate either one or two push buttons.
2. Do not ground the shield for the push button lead-in cable at the controller cabinet.
3. Do not splice the cable at any point. A direct connection from the control cabinet assembly to the push button shall be made.
4. Do not use the same 3 pair cable for inductance loops and pedestrian detectors.
5. The wiring color code for pedestrian push buttons presented in Table 10.

Table 10 – Wiring Standards for Pedestrian Push buttons

	3-Pair Shielded Cable	
	Phase 2 and 6	**Phase 4 and 8**
2 Wire Push button	Green and Black Pair	Red and Black Pair

C. Testing Requirements

1. Verify circuit continuity for each pedestrian push button.
2. Verify pedestrian countdown is displaying the correct pedestrian clearance time (Flashing Upraised Hand).
3. For audible pedestrian push buttons, verify:
    a. The street name is correct and clearly pronounced.
    b. The street names are announced with the proper pedestrian phase.

4. Locator tones are set approximately 15 decibels above the ambient noise of the area, as measured 1 ft. (0.3 m) from device.

937.3.04 Video Detection System

A. General Installation Requirements

1. Install all video camera sensors, VDS processors, output expansion modules, and associated enclosures and equipment at the locations specified in the Contract and per manufacturer recommendations to provide optimum actuation accuracy.
   a. For traffic control signal cabinets and ITS field cabinets, mount the processor and output expansion modules within the input files, or at a location designated by the Department.
   b. Physical changes to the traffic control signal cabinets input files are not permitted.
   c. Make all necessary adjustments and modifications to the detection system prior to obtaining recommendation for system acceptance testing.
   d. For freeway mainline detection applications, install all rack-mounted equipment with one rack unit space between adjacent equipment in the freeway controller or field cabinet.
2. Verify installation, surge protection, and all cabling complies with manufacturer's recommendation, specifications, and as specified in the Contract.
   a. All equipment, cables, and hardware shall be designed by the manufacturer to fully interoperate with all other system components and be fully protected from all surge potential.
   b. Connectors installed outside the controller or field cabinets and enclosures shall be manufacturer- terminated and corrosion resistant and weathertight.
3. Unless otherwise noted in the Contract, all wiring and cables shall be continuous (without splices) between the video camera sensor and processor, except for surge protection connections between sensor and cabinet, so that both the camera and processor are protected.
4. Coil a minimum of 6 ft. (1.8 m) of slack in the bottom of the controller or field cabinet.
   a. Tape ends of unused and spare conductors to prevent accidental contact to other circuits.
   b. Label conductors inside the controller or field cabinet for the functions depicted in the approved detailed diagrams of the cabinet and VDS documents.
5. Furnish an as-built cabinet wiring diagram, identified by location, for each detection system controller or field cabinet.
   a. Include all wiring, cabling, connections, and camera mounting height.
   b. Place all documentation in a weathertight holder in the cabinet.
6. For freeway applications, install VDS power supply or transformer on a standard DIN rail and wire power conductors to terminal blocks in the controller or field cabinet.
7. All metal camera detection components, including mounting hardware, shall be grounded and bonded per manufacturer's recommendations and NEC.

B. Video Camera Sensor Installation

1. Include a video camera sensor mounting bracket as recommended by equipment manufacture and all associated hardware and materials.
2. Mount the video camera sensor on a mounting bracket assembly that meets the following requirements unless otherwise specified in the Contract:
   a. Mount the camera on the specified pole or structure for that location as shown in the Contract.
   b. Mount the video camera sensor on a mounting bracket so that its height and position provide a clear view of the approach or lanes.
   c. Use stainless steel fastening hardware with lock washers on threaded fasteners.

d. Use a video camera sensor enclosure mounting bracket as recommended by equipment manufacturer.

e. Provide a mounting bracket that permits vertical and horizontal adjustment of the video camera sensor.

f. Provide a mounting bracket that fastens to the video camera sensor enclosure and mounts to the nipple pipe by threading onto the pipe or as a slip-fit, using a set-screw fastener in either above method.

g. Use a 1.5-in (38 mm) aluminum nipple pipe threaded on both ends.

h. Fasten the nipple pipe to the mast arm using a cable mount nipple clamp with minimum two 5/16 in. U bolts. Use aircraft-grade galvanized steel cables with stainless steel fastening hardware and that make a minimum of two wraps around the mast arm. Do not use banding straps.

3. Align all cameras to exclude the horizon in the video image.

4. Label cables for VDS cameras by numbering and naming all terminal blocks, terminal strips, circuit breakers, and buss bar breakers according to function. Labels shall be weather and wear resistant.

C. VDS Surge Protection

1. Protect all copper wiring and cabling entering the controller or field cabinet housing by surge protection devices as specified in this section and UL 1449.

2. Furnish and install a surge suppressor for each data and video signal cable as required in UL 1449.

3. Terminate all wiring between controller and field cabinet and the transient surge protection devices except for the video signal coaxial feed on terminal strips.

4. Label all surge protection devices with silk-screened lettering on the mounting panel.

5. Furnish and install all surge protection to protect the controller, field cabinet processor, and video camera sensor from ground rise potential (i.e., surge up to the video camera sensor).

6. Provide the following documentation in a weathertight documentation pouch in each controller or field cabinet:

   a. One operation manual with programming instructions.

   b. One maintenance manual with schematics.

   c. Three legible wiring prints showing all VDS components, model and serial number, and connections with the controller or field cabinet.

D. VDS Cabinet Equipment

1. Fasten all components of the controller or field cabinet assembly to be mounted on cabinet side panels with hex-head or Phillips-head machine screws.

2. Install the screws into tapped and threaded holes in the panels. These components include, terminal blocks, buss bars, panel and socket mounted surge protection devices, accessory and equipment outlets, and DC power supply chassis.

3. Fasten all other cabinet components with hex-head or Phillips-head machine screws insulated with nuts (with locking washer or insert) or into tapped and threaded holes.

4. All fastener heads and nuts (when used) shall be fully accessible within a complete controller or field cabinet assembly, and any component shall be removable without requiring removal of other components, panels, or mounting rails.

5. Do not use self-tapping or self-threading fasteners.

6. For Type 336S controller cabinet or field cabinet applications:

   a. Locate the VDS power termination panel on the equipment rail in the lower left portion of the rear of the cabinet as shown in the Contract and Standard Detail Drawings.

   b. Adjust the panel as close to the sidewall as possible while still providing access to the circuit breaker.

   c. Notify the Department immediately if there are conflicts with existing cabinet equipment in this position.

   d. Verify that there are no conflicts with door-mounted components when the door is closed.

7. For Type 332 and 334 controller cabinet or field cabinet applications:
   a. Locate the VDS coax termination panel in the lower open section of the front of the cabinet equipment rack as shown in the details.
   b. Verify that there are no conflicts with door-mounted components when the door is closed.
   c. Notify the Department immediately if there are conflicts with existing cabinet equipment in this position.
   d. Dress, label, and secure all coaxial cabling to and from the coax termination panel so that the panel can be hinged open a minimum of 90° without binding or stressing any coaxial cable.
8. Label VDS cables and components for operation and vehicle actuation on one intersection approach leg. Used as a prefix, it identifies the individual VDS components used for signal as follows for "nnn" direction of traffic flow, type of detection, and lane assignment:
   a. VDSnnnPOE: power over ethernet cable from controller cabinet to the video camera.
   b. VDSnnnCC: coaxial cable from the video camera to the controller cabinet.
   c. VDSnnnPC: video camera sensor power cable from the video camera to the controller cabinet.
   d. VDSnnnCSS: coaxial cable surge suppressor in the controller cabinet.
   e. VDSnnnCJ: coaxial jumper cable from the coaxial surge suppressor in the controller cabinet to the processor module or detector panel.

E. Testing Requirements

1. Perform VDS testing after installation, configuration and calibration of detection zones, and communicating on the network.
2. Submit test plan for Department approval.
3. Include the following items on the test plan:
   a. Provide checklist for field component installation and cable terminations.
   b. Verify that installation is completed as specified in the Contract.
   c. Verify the quality of grounding, bonding, and surge protector connections.
   d. Record power supply voltage and outputs and verify that device connections are as specified in the Contract.
   e. Verify the installation of cables and connections between detectors and controller or field cabinets comply with the manufacturers' recommendations.
   f. Demonstrate each video detection system is fully operational and gathering any specified data at the appropriate interval. Perform the test from the hub building where the detection system is connected.
4. Upon satisfactory completion, the Department will integrate the new video detection system onto the network.

937.3.05 Radar Detection System

A. General Installation Requirements

1. Install all detectors and associated equipment at locations specified in the Contract.
2. Installation shall comply with manufacturer's recommendation.
3. Verify height requirements based on manufacturer's recommendations and notify the Department if the mounting height varies from the information provided in the Contract.
4. All detector equipment, cables, and hardware shall fully interoperate with all other microwave detection system components.
5. Install surge protection devices that are manufacturer-recommended and approved for all equipment.
6. Ground and bond all metal microwave detection components, including mounting hardware, per manufacturer recommendations and NEC requirements.
7. Obtain approval from the Department for all field adjustments.

B. Controller or Field Cabinet Equipment

1. Wiring, Conductors, and Terminal Blocks
   a. Furnish and install a manufacturer-terminated cable long enough for detector installation.
   b. Use only cables provided by the detection system's manufacturer. Cables shall be splice free.
   c. The detector end-connector shall be manufacturer-assembled and tested prior to installation. Connections shall be watertight.
   d. Use cabling that is UV rated for outdoor and underground use.
   e. Route RDS control wiring and 120 VAC power wiring separately to prevent transient voltage bleeds over to the detector cable.
   f. Terminate all wiring on a terminal block, strip, buss bar, or device clamp or lug. Do not splice wiring from the detector unit to the terminal blocks.
   g. Number and label all cables, wires, terminal strips, circuit breakers, and buss bar breakers, and have each item and terminal position numbered and named by function with weather and wear resistant labels.
2. Component Installation
   a. Fasten all components of the controller or field cabinet assembly mounted on cabinet side panels with hex-head or Phillips-head machine screws.
   b. The components include terminal blocks, buss bars, panel and socket mounted surge protectors, terminal servers, Ethernet switches, circuit breakers, and accessory and equipment outlets.
   c. Fasten stud-mounted components to a mounting bracket providing complete access to the studs and mounting nuts.
   d. All fastener heads and nuts shall be fully accessible in a complete controller or field cabinet assembly. Removing any component shall not require removing other components, panels, or mounting rails.
   e. Do not use self-tapping or self-threading fasteners.

C. Testing Requirements

1. Perform RDS testing after installation, configuration and calibration of detection zones, and communicating on the network.
2. Submit test plan for Department approval.
3. Provide the following on the test plan:
   a. Provide checklist for field component installation and cable terminations.
   b. Verify that installation is completed as specified in the Contract.
   c. Verify quality of grounding, bonding, and surge protector connections.
   d. Record power supply voltage and outputs and verify that device connections are as specified in the Contract.
   e. Verify that the installation of cables and connections between detectors and controller or field cabinets comply with the manufacturers' recommendations.
   f. Demonstrate that each microwave detection system is fully operational and gathering any specified data at the appropriate interval. Perform the test from the hub building where the detection system is connected.
4. Upon satisfactory completion, the Department will integrate the new microwave detection system onto the network.

937.3.06 Not Applicable

Table 11 – Not Applicable

937.3.07 Continuous Count Station System

A. General Installation Requirements

1. If weigh-in-motion application is shown in the Contract, see Section 691 for additional requirements.
2. For inductance loop applications, see Section 937.03.02 for additional requirements.
3. Install all detectors and associated equipment at locations specified in the Contract.
4. Installation shall comply with manufacturer's recommendation.
5. Install surge protection devices that are manufacturer-recommended and approved for all equipment.
6. Ground and bond all metal detection components, including mounting hardware, per manufacturer recommendations and NEC requirements.
7. Obtain approval from the Department for all field adjustments.

B. Testing Requirements

1. Perform testing after installation, configuration and calibration of detection zones, and communicating on the network.
2. Submit test plan for Department approval.
3. Provide the following on the test plan:
   a. Provide checklist for field component installation and cable terminations.
   b. Verify that installation is completed as specified in the Contract.
   c. Verify the quality of grounding, bonding, and surge protector connections.
   d. Record power supply voltage and outputs and verify that device connections are as specified in the Contract.
   e. Verify that the installation of cables and connections between detectors cabinet comply with the manufacturers' recommendations.
   f. Demonstrate that each detector system is fully operational and gathering any specified data at the appropriate interval.
4. Upon satisfactory completion, the Department will integrate the new continuous count station onto the network.

937.3.08 Temporary Detection System

A. General Installation Requirements

1. When identified with a pay item, the Contract shall identify the locations of a temporary vehicle detection system.
2. The Contract shall identify the time period for temporary detection system.
3. Install, remove, and retain the temporary detection system for temporary usage on construction projects, where detection is temporarily interrupted by construction activities.

B. Installation

1. Install temporary detection system with all necessary sensors and cabling to form a functioning system.
2. Install the temporary detection system before removal of existing system.
3. Maintain the equipment during operation. Adjust the sensors and detection zones for the configuration of each phase of construction until the final configuration is constructed.
4. Remove the temporary detection system without damaging the new or existing traffic signal equipment.

C. Maintenance Requirements

1. The Contractor shall be responsible for maintaining the detection system as described above.

937.3.09 Warranty and Maintenance Support Services

A. Warranty

1. Provide a minimum warranty length of five years for detection systems and associated components. If the manufacturer's warranties for the components are for a longer period, those longer period warranties shall apply.
2. Refer to Section 942.3 for general warranty requirements.

B. Maintenance Support Services

Refer to Section 942.3 for maintenance support services requirements.

937.4 Measurement

A detection system, accepted by the Department after a successful 30-day burn-in period, is paid for at the Contract unit price. Payment is full compensation for the labor, materials, equipment, tools, test equipment, incidentals, installation, testing, and providing warranty necessary for the detection system technology.

937.4.01 Inductance Loop Detection System

Inductance Loop Detection System for traffic signal projects is measured as lump sum per location (traffic signal) installed, completed, functional, and accepted. Unless otherwise specified in the Contract, furnish, install, and test all components to detect vehicles as shown for a traffic signal.

937.4.02 Pedestrian Detection System

Pedestrian Detection System is measured as lump sum per location installed, completed, functional, and accepted. Unless otherwise specified in the Contract, furnish, install, and test all components to detect pedestrians.

937.4.03 Video Detection System

Video Detection System is measured as lump sum per location (traffic signal) installed, completed, functional, and accepted. Unless otherwise specified in the Contract, furnish, install, and test all components to detect vehicles as shown for a traffic signal.

937.4.04 Radar Detection System

Microwave Radar Detection System is measured as lump sum per location (traffic signal) installed, completed, functional, and accepted. Unless otherwise specified in the Contract, furnish, install, and test all components to detect vehicles as shown for a traffic signal.

937.4.05 Not Applicable

937.4.06 Continuous Count Station System

Continuous Count Station System is measured as lump sum per location installed, completed, functional, and accepted. Unless otherwise specified in the Contract, furnish, install, and test all components to detect vehicles as shown for a continuous count station.

937.4.07 Continuous Count Station System, Weigh-in-Motion

Continuous Count Station System, Weigh-in-Motion is measured as lump sum per location installed, completed, functional, and accepted. Unless otherwise specified in the Contract, furnish, install, and test all components to detect vehicles as shown for a continuous count station that includes weigh-in-motion.

937.4.08 Temporary Detection System

Temporary Detection System is measured as lump sum per location (traffic signal) for the Contractor to install, configure, and remove a temporary vehicle actuation during construction. Payment shall be divided into equal payments based on the number of maintenances of traffic phases presented in the Contract. The final vehicle detectors or detection zone configuration shall be included in the work associated with Section 937.3, as appropriate.

937.4.09 Maintenance of Detection System

Maintenance of Detection System is measured as lump sum per location (traffic signal) installed using the Maintenance of Detection System pay item. Payment shall be divided into equal payments based on Contract and shall not be used in conjunction with Temporary Detection System. Final configuration of the detection system shall be part of Section 937.3, as appropriate.

937.4.10 Training; Detection System

Training will be measured as a lump sum for supplies, equipment, materials, handouts, travel, and subsistence necessary to conduct the training.

937.5 Payment

937.5.01 General

Payment is full compensation for furnishing and installing a detection system. This price will include full compensation for labor, materials, equipment, tools, test equipment, incidentals, installation, testing, and providing warranty necessary to complete the work as described in this section. The total sum of all payments cannot exceed the original Contract amount for this item.

Payment Notes:

Submittal

Submittal requirements will not be paid for separately. It will be considered incidental to the individual detection system pay item.

Field Cabinet

Field cabinets for ITS and continuous count station applications will be paid for separately under Section 939.5 pay items.

Testing

Testing will not be paid for separately. It will be considered incidental to individual detection system pay items.

Item No. 937	Inductance Loop Detection System, Type	Per lump sum
Item No. 937	Pedestrian Detection System, No.-	Per lump sum
Item No. 937	Video Detection System, No.-	Per lump sum
Item No. 937	Radar Detection System, No.-	Per lump sum
Item No. 937	Temporary Detection System, No.-	Per lump sum
Item No. 937	Maintenance of Detection System, No.-	Per lump sum
Item No. 937	Continuous Count Station System, No.-	Per lump sum
Item No. 937	Continuous Count Station System, Weigh-in-Motion, No.-	Per lump sum
Item No. 937	Training; Detection System	Lum Sum

937.5.02 Adjustments

General Provisions 101 through 150.

Revised for Cobb County

Section 939 – Communications and Electronic Equipment

939.1 General Description

Furnish, install, test, and provide warranty and training for communications and electronic equipment and materials as specified herein and shown in the Contract documents.

939.1.01 Definitions, Acronyms, and Abbreviations

A. Definitions

1. **Field Cabinet, Type 1:** a modification of the JC Standard ITS Cabinet Housing #2.
2. **Field Cabinet, Type 2:** JC Standard ITS Cabinet Housing #2.
3. **Field Cabinet, Type 3:** JC Standard ITS Cabinet Housing #1.
4. **Field Cabinet, Type 4:** JC Standard ITS Cabinet Housing #3.
5. **Field Switch, Type A:** Layer 2, minimum 6 copper ports and 2 SFP 1 Gbps fiber ports.
6. **Field Switch, Type B:** Layer 2, minimum 6 copper ports and 3 SFP 1 Gbps fiber ports.
7. **Field Switch, Type C:** Layer 2, minimum 1 copper port and 7 SFP 1 Gbps fiber ports.
8. **Field Switch, Type D:** Layer 2 or 3 upgradeable, minimum 4 copper ports and 4 dual-purpose 1 Gbps ports.
9. **Field Switch, Type E:** Layer 2 or 3 upgradeable, minimum 8 copper ports and 4 dual-purpose 1 Gbps ports.
10. **Routing Switch, Hub, Type A:** Layer 3, minimum 48 ports at 1G/10G/25 Gbps SFP+ and 6 ports at 40G/ 100 Gbps QSFP28.
11. **Routing Switch, Hub, Type B:** Layer 3, minimum 48 ports at 10/100/1 Gbps copper and 4 ports at 1 Gbps SFP.
12. **SFP Fiber Module, Type 1:** LX optics for shorter distances.
13. **SFP Fiber Module, Type 2:** ZX optics for longer distances.
14. **Security Lock:** an electronic lock system that controls access to a field cabinet, and the cylinder can retrofit existing field cabinet mechanical lock hardware.

B. Acronyms and Abbreviations

Refer to Sections 101.01 and 942.1.01.B for a list of acronyms, abbreviations, and terminology used in this section.

939.1.02 Related References

A. GDOT Standard Specifications

1. Section 631 – Dynamic Message Signs
2. Section 639 – Strain Poles for Overhead Sign and Signal Assemblies
3. Section 647 – Traffic Signal Installation
4. Section 682 – Electrical Wire, Cable, and Conduit
5. Section 694 – Weather Monitoring and Reporting System
6. Section 925 – Traffic Control Signal Equipment
7. Section 926 – Wireless Communications Equipment
8. Section 935 – Fiber Optic System
9. Section 936 – Closed Circuit Television (CCTV)

10. Section 937 – Detection Systems
11. Section 942 – ITS General Requirements

B. Referenced Documents

Refer to Section 942.1.02.B for a list of standards and documents referenced in this section.

939.1.03 Submittals

Refer to Section 942.1.04 for submittal requirements. Requirements for communications and electronic equipment materials are specified herein.

939.2 Materials

939.2.01 General

A. Comply with ISO 9001 or Six Sigma quality manufacturing requirements.

B. Provide only equipment and materials that are new and of like kind and function provided by one manufacturer, using the same model, part number, revision, and firmware as shown and specified in the Contract documents.

939.2.02 Field Switch Requirements

A. General

1. Provide one or more of the field switch types listed in Table 1 as specified in the Contract documents.

Table 1 – Field Switch Types

Type	Layer Capability	Ethernet Port Configuration
Type A	Layer 2	Minimum 8 ports total including 2 Gigabit-Ethernet SFP ports and 6 10/100Base-T/TX ports
Type B	Layer 2	Minimum 9 ports total including 3 Gigabit-Ethernet SFP ports and 6 10/100Base-T/TX ports
Type C	Layer 2	Minimum 8 ports total including 7 Gigabit-Ethernet SFP ports and 1 10/100Base-T/TX port
Type D	Layer 2 or Layer 3 upgradeable	Minimum 8 ports total including 4 dual-purpose uplink or downlink ports that can be used for 10/100/1000BASE-T/TX ports or 100/1000 Mbps SFP ports, and 4 10/100/1000Base-T/TX ports
Type E	Layer 2 or Layer 3 upgradeable	Minimum 16 ports total including: 4 dual-purpose uplink or downlink ports that can be used for 10/100/1000Base-T/TX ports or 100/1000 Mbps SFP ports, and 8 10/100/1000Base-T/TX ports

2. Provide field and routing switches that are compatible with the existing GDOT network by support of features and implementation of common standards that enable switches to work together and minimize integration effort.
3. Provide field switches with the following interfaces:
   a. Provide fiber ports with 1000BaseSFP slot or 100/1000BaseSFP slot.
   b. Provide 10/100Base-T(X) or 10/100/1000Base-T(TX) RJ-45 ports with auto negotiation speed and capable of being manually set to half-duplex or full-duplex.
   c. Provide console port along with any adapter cables as needed and approved by the Department.
   d. Provide LED indicators including power on/off and network status per port (transmit, receive, link, and speed).
4. Provide field switch that can operate with non-blocking, store and forward, switching at full wire speed.
5. Provide field switch that supports detecting and shutting down one-way link failures using auto-negotiation.

6. Provide field switch with a minimum MTBF of 200,000 hours using Telcordia SR-332, Method 1, Case 3 or MIL-HDBK-217F standards.
7. Provide field switch that complies with IEEE 802.3 for 10Base-T standard specifications.
8. Provide field switch that complies with IEEE 802.3u for 100Base-T(X) standard specifications.
9. Provide field switch that complies with IEEE 802.3ab for 1000Base-T(X) standard specifications.
10. Provide field switch that complies with IEEE 802.3z for 1000Base-X standard specifications.

B. Network Capabilities and Features

1. Provide field switch that supports multicast with IGMP v1/v2/v3 snooping and IGMP-filtering.
2. Provide field switch that complies with IEEE 802.3x (Flow Control) standard.
3. Provide field switch that complies with IEEE 802.1p (Class of Service or Priority Queuing) standard.
4. Provide field switch that complies with IEEE 802.1Q (VLAN tagging) standard per port.
5. Provide field switch that complies with IEEE 802.1D (Spanning Tree Protocol) and IEEE 802.1w (Rapid Spanning Tree Protocol) standards.
6. Provide field switch that complies with IEEE 802.3ad (Link Aggregation or Port Trunk) standard for a minimum of two groups of four ports.

C. Security

1. Provide field switch that can be configured for static MAC address access.
2. Provide field switch that can disable automatic address learning per ports; known hereinafter as Secure Port. Secure Ports only forward statically configured MAC addresses.
3. Provide field switch that can trap and provide an alarm upon any unauthorized MAC address and shutdown. Require administrator to manually reset the port before communications are permitted.
4. Provide field switch that complies with IEEE 802.1X Port Access Authentication.
5. Provide field switch that supports HTTP and HTTPS.
6. Provide field switch that supports SSL.

D. Network Management

1. Provide network management capabilities that are compatible with the existing Cobb County DOT network management consisting of Cisco Prime centralized enterprise management software supporting remote management.
2. Provide field switch that is password manageable with a minimum of one read-only profile and one full administration profile.
3. Provide field switch that fully implements SNMP v1/v2/v3.
4. Provide field switch that implements LLDP as defined in IEEE 802.1ab (Station and Media Access Control Connectivity Discovery).
5. Provide field switch that fully implements RMON I statistics, history, alarms, and events objects.
6. Provide field switch that can mirror any port to any other port within the field switch.
7. Provide field switch that can be managed remotely by an enterprise software/program for configuration, reporting, updates, and monitoring of alarms.
8. Provide field switch with environment monitoring capabilities.
9. Provide management capabilities via a serial maintenance/console serial port (local) and over the network (remote).
10. Provide field switch that supports HTTP (Embedded Web Server) with SSL.
11. Provide field switch that fully implements RFC 1350 (TFTP) to allow remote firmware upgrades.

E. Additional Requirements for Field Switch Types D and E

1. Provide, in the quantity specified in the Contract documents, Gigabit-Ethernet Combo ports, where each Gigabit-Ethernet Combo port is defined as a single interface that can be used as a 10/100/1000Base-T/TX ports or 100/1000Base SFP GBIC socket.
2. Provide a card slot for a field removable SD read-write memory card (included) that can store switch operating system modules and switch configuration modules and is addressable/manageable from the switch's management interface and built-in memory system.
3. Provide field switch that can boot from and load configuration from the removable memory card slot or from the built-in memory, as defined by the user.
4. Provide field switch that allows push/pull of switch operating system modules and switch configuration settings from the Cobb County network management system.
5. Provide field switch that can convert from Layer 2 to Layer 3 switch and routing protocols, as specified in Section 939.2.03, with only a change in the switch operating system or license.
6. Provide a sufficient quantity of fiber optic patch cords to match the populated optical ports on the Field Switch. Include duplex fiber optic single-mode patch cords, 3 ft. (1 m) in length, in accordance with Section 935 and with ST-connectors on one end (at the FDC) and an LC-connector on the other end (at the Field Switch).

F. Mechanical and Cabling

1. Provide field switches that are capable of rack mounting and DIN rail panel mounting. Rack-mounted DIN rails may be installed if cabinet space is available. Shelf mounting is not permitted.
2. Provide hardware and materials for mounting the field switch within the field cabinet.
3. Provide rubber dust caps or covers with insertion and removal handles that completely seal the port opening for unused copper and SFP ports.
4. Provide field switch with a fan-less (no fan) design.

G. Electrical

1. Provide field switch that is capable of operating over minimum input voltage range of 108 VAC to 132 VAC at 50/60 Hz (±5%, maximum).
2. Provide field switch with power conversion as specified herein and provide regulation necessary to support electronics operation.
3. Provide field switch that complies with IEC EN 61000-4-5 surge immunity for network equipment.
4. Provide power transformers with a "fastening mechanism." No plug-in types are permitted. Corded transformers shall be mountable with neatly secured power cords.

H. Environmental

1. Provide hardened field switch including power supply that comply with NEMA TS 2 Sections 2.1.7, 2.1.8, and temperature, humidity, vibration, and shock testing requirements.
2. Comply with FCC Part 15 emission standard and FCC Public Notice 2019-01.

939.2.03 Routing Switch Requirements

A. General

1. Provide one or more of the routing switch types listed in Table 2 as specified in the Contract documents.

Table 2 – Routing Switch Types		
Type	**Layer Capability**	**Ethernet Port Configuration**
Type A	Layer 3	Providing a minimum 48 1/10/25 Gbps SFP+ ports + 6 40/100 Gbps QSFP28 uplink ports per switch
Type B	Layer 3	Providing a minimum 48 10/100/1000 Ethernet copper ports + 4 SFP 1 Gbps ports per switch, stackable

2. Provide routing switches that are compatible with the existing Cobb County DOT routing network consisting of Cisco Systems 4500 and 6800 Layer 3 routing switches that can be managed by the Department's existing network management software.
3. Populate routing switch with optical SFPs meeting the minimum SFP requirements in Section 939.2.04 and as required in the Contract documents.
4. Provide routing switch with a minimum MTBF of 200,000 hours using Telcordia SR-332, latest version, or MIL-HDBK-217J standards.
5. Provide routing switches for up to 4,096 VLANs.
6. Provide routing switch where modules are hot-swappable.
7. Provide routing switch that can be EIA 19 in (483 mm) rack mounted (one rack unit per routing switch, typical).

B. Network Standards and Protocols

1. Provide network that supports Layer 2 and 2+ protocols specified in Section 939.2.02.
2. Provide network that supports additional network Layer 3 protocols as follows:
   a. IPv4 and IPv6.
   b. Full implementation of IGMP v1/v2/v3.
   c. TACACS Plus (+).
   d. RADIUS protocol.
   e. Full implementation of RIP.
   f. Full support for BGP.
   g. Full implementation of OSPF protocol.
   h. Full implementation of GMRP.
   i. Full implementation of GVRP.
   j. Full implementation of PIM Sparse Mode.
   k. Full implementation of VRRP.

C. Mechanical and Cabling

1. Provide routing switches that are rack mountable.
2. Provide hardware and materials for mounting within the equipment rack that are corrosion resistant.
3. Provide rubber dust caps or covers with insertion and removal handles that completely seal the port opening for unused copper and SFP/QSFP ports.

D. Electrical

1. Provide field switch that can operate over a minimum input voltage range of 108 VAC to 132 VAC at 50/60 Hz (±5%, maximum).
2. Provide field switch that complies with IEC EN 61000-4-5 surge immunity testing requirements.

3. Provide routing switch with dual redundant power supplies and fans, N+1 configuration, hot swappable, and configured for 120 VAC service.

E. Environmental

1. Provide routing switch with power supply that meets following minimum ambient temperature and humidity requirements:
   a. Temperature range from +23°F through +113°F (–5°C to +45°C).
   b. Relative humidity from 10% through 95%, noncondensing.
   c. Comply with NEMA TS 2 Sections 2.1.8 and 2.1.9 vibration and shock testing requirements.
2. Comply with FCC Part 15 emission standard and FCC Public Notice 2019-01.

939.2.04 SFP Fiber Module Requirements

A. General

1. Provide SM, dual-fiber SFPs with LC connectors.
2. Provide the following types of full duplex, SFP fiber optical modules as shown in the Contract documents or as required:
   a. Type 1: LX/LH optics for single-mode fiber that is >6.2 miles (10 km) in length (under ideal conditions).
   b. Type 2: ZX optics for single-mode fiber that is >43 miles (70 km) in length (under ideal conditions).
3. Provide SFPs that comply with IEEE 802.3x, 1000Base-LX/LH and 1000Base-ZX standards.
4. Provide fiber optic patch cords as specified in Section 935.2.01.G with integral optical attenuators if required for optical power control per the field switch manufacturer's recommendations.
5. Provide SFPs that are 100% compatible with the field switch or network device in which the SFP is inserted, including any serial number or other identifying information. Only demonstrated proven SFPs that do not require non-default, switch configuration settings are permitted.
6. Provide SFPs that are hot-swappable.
7. Provide SFP that operates as its own switched port.
8. Provide a quantity of fiber optic patch cords that matches the number of populated SFP ports on the field switch, in accordance with Section 935.2.01.G, with ST connectors on one end (at the FPP/FDU) and an LC connector on the other end (at the field switch).

B. Environmental

Provide SFPs with extended temperature capabilities meeting the following minimum requirements:

1. Ambient temperature range from +23°F through +185°F (–5°C through +85°C).
2. Relative humidity from 10% through 95%, non-condensing.

939.2.05 Network Patch Cord Requirements

A. General

1. Provide field switch patch cords that meet ANSI/TIA requirements for Category 6, four-pair unshielded twisted pair cabling with stranded conductors and RJ-45 connectors.
2. Provide network patch cords that are factory assembled, connectorized, and certified by the manufacturer to meet the performance standards specified herein.
3. Provide network patch cords that comply with TIA-568-C.2 and UL 444 standards.
4. Provide network patch cords with eight (four STP) insulated No. 22 to No. 24 AWG, solid bare copper conductors arranged in four color-coded twisted-pairs.

5. Provide network patch cords with modular RJ-45 male connectors with eight-position non-keyed and eight gold anodized pins.
6. Provide network patch cord connectors that incorporate mechanical cable strain relief and protective boots.
7. Provide network patch cords that characterize to 600 MHz and design margin (headroom) beyond standard Near-End Crosstalk, Power Sum NEXT, Attenuation-to-Crosswalk Ratio, and Power Sum ACR.
8. Provide network patch cords with lengths of patching from field switch to equipment inside the field cabinet or equipment rack without strain. Provide custom or standard lengths as required or needed based on final equipment layout and configuration that permits future movement of equipment within the field cabinet or equipment rack.
9. Provide network patch cord that is riser-rated.

939.2.06 Field Cabinet Requirements

A. General

1. Provide one or more of the field cabinet types listed in Table 3 as specified in the Contract documents.

Table 3 – Field Cabinet Types and Configuration

GDOT Type	Joint Committee ITS Cabinet Standard	Minimum Cabinet Dimension Range			Number of Doors
		Height	Width	Depth	
Type 1	Modified ITS Cabinet Housing #2	30 in. to 36 in. (0.76 m to 0.91 m)	23 in. to 26 in. (0.58 m to 0.66 m)	18 in. to 24 in. (0.46 m to 0.61 m)	2
Type 2	ITS Cabinet Housing #2	44 in. to 47 in. (1.12 m to 1.20 m)	23 in. to 26 in. (0.58 m to 0.66 m)	18 in. to 24 in. 0.46 m to 0.61 m)	2
Type 3	ITS Cabinet Housing #1	64 in. to 67 in. (1.62 m to 1.70 m)	23 in. to 26 in. (0.58 m to 0.66 m)	24 in. to 30 in. (0.61 m to 0.76 m)	2
Type 4	ITS Cabinet Housing #3	64 in. to 67 in. (1.62 m to 1.70 m)	44 in. to 46 in. (1.12 m to 1.17 m)	24 in. to 30 in. (0.61 m to 0.76 m)	4

2. Unless otherwise specified in the Contract documents or directed and approved by the Department, construct all ITS cabinet (field cabinet) housing assemblies in conformance with this section and the JC ITS Cabinet Standard Specifications for Roadside Cabinets. Do not include with the field cabinet housing the following:
   a. Police panel and associated wiring.
   b. Power distribution assembly and associated flasher units, and signal power contactor.
   c. DC power distribution assembly (12 VDC and 24 VDC).
   d. Input file and associated sensor units, isolator units, and serial interface unit.
   e. Output file and associated auxiliary monitor unit, serial interface unit, transfer relay unit, and switch pack unit.
   f. Field cabinet monitor unit assembly.
   g. Serial and control bus assemblies and wiring.
3. Mount field cabinets in the following configurations:
   a. Unless otherwise specified in the Contract documents, configure Type 1 and Type 2 field cabinet housing assemblies for pole mounting and Type 3 and Type 4 field cabinet housing assemblies for ground or base-mounting.
   b. Reinforce the holes for pole mounting with metal plates of adequate size and strength welded longitudinally across the inside depth of the field cabinet.

c. Where ground or base-mounting of field cabinets is specified, make the field cabinet bottom open and provide an approved concrete pad for mounting the field cabinet along with technician pad in front and back of cabinet doors and base mounting adapter, in accordance with Section 647 and the standard detail drawings.

B. Field Cabinet Components

1. Equip all field cabinet housings with the standard EIA 19 in (483 mm) rack cage as described in the JC ITS Cabinet Standard Specifications and as follows:
   a. Do not use unistruts or other rail types.
   b. For Types 1, 2 and 3, equip field cabinet housings with the standard EIA 19 in. (483 mm) rack cage.
   c. For Type 4, equip field cabinet housings with two standard EIA 19 in. (483 mm) rack cages.
2. Provide field cabinet with side mounting panel meeting the following requirements:
   a. Fabricate side mounting panels as described in the JC ITS Cabinet Standard Specifications for J Panels.
   b. Do not provide pre-punched terminal block/bar or component mounting holes, except holes for mounting the side panel to the rack cage.
   c. In all field cabinet types provide one side panel on one side of each rack cage that are the full depth of the rack cage and the rack cage height less 2 in (50 mm) at the top and bottom.
3. Provide field cabinet with cabinet shelf meeting the following requirements:
   a. Provide perforated and ventilated shelf meeting the following minimum requirements:
      i. Telescoping guides to allow full extension from the rack cage.
      ii. Construction that supports a weight of 25 lb. (11 kg) when extended.
      iii. A minimum non-slip work area measuring 12 in. (304 mm) by 12 in. (304 mm).
   b. For Types 2 and 3, equip field cabinet with one cabinet-sliding internal shelf.
   c. For Type 4, equip field cabinet with two sliding internal shelves.
4. Provide field cabinet with document pouch meeting the following requirements:
   a. Provide a plastic documentation pouch that is side-opening, resealable, opaque, and of a heavy-duty plastic material to store the field cabinet and equipment documentation.
   b. Provide a pouch that has metal or hard-plastic reinforced holes for hanging from hooks included on the field cabinet door.
   c. Provide a pouch has the size and strength to hold 200 sheets of 8.5 in. (215 mm) by 11 in. (279 mm) paper.
   d. Provide field cabinets with metal hooks welded to the inside of the front cabinet door, for hanging the plastic documentation pouch securely when opening and closing the front cabinet door.
5. Provide field cabinet with wiring, conductors, and terminal blocks that meet the following requirements:
   a. Provide component mounting DIN rail meeting the following requirements:
      i. Mount all 120 VAC service entrance, power distribution, grounding, and surge protection components on standard DIN rails mounted on recessed rack mounted panels or on rack side panels as shown in the standard detail drawings. Devices include terminal blocks, circuit breakers, and surge protection devices. Other components and devices that may be DIN rail mounted include network switches, power supplies, and PoE injectors.
      ii. Provide 1.38 in. (35 mm) wide by 0.3 in. (7.5 mm) high by 0.04 in (1 mm) thick standard DIN rails perforated and cut to length for flexible mounting.
      iii. Provide DIN rail that is burr free with no sharp edges or deformation from the standard profile.
      iv. Provide DIN rail that complies with IEC EN 50022 (NS35), IEC EN 60715, and DIN 46277.
      v. Provide nut, bolt, and start washers to mount to panel for low resistance electrical connection.

vi. Provide an anti-corrosion paste to provide a solid and long-lasting electrical connection between the DIN rail and the mounting panel.

b. Provide terminal blocks meeting the following requirements:

i. Use terminal blocks with voltage and current ratings greater than the voltage and current ratings of the wires that are terminated on the blocks.

ii. Terminate conductors on terminal blocks using insulated terminal lugs large enough to accommodate the conductor to be terminated.

iii. Terminate field wiring terminal block screws using a terminal ring lug for termination when two or more conductors are terminated.

iv. Use metallic terminal block connection hardware and components that are non-ferrous copper or nickel/tin-plated copper alloy or equivalent.

v. Provide terminal blocks and wires that comply with the following colors:

a) Black – Line

b) White – Neutral

c) Green or Green/Yellow - Ground

vi. Provide a ground terminal that is the same size and pitch as the power terminals and provides positive electrical and mechanical connection to the mounting rail.

vii. Provide terminal blocks that comply with UL 1059.

viii. Provide terminal blocks that are capable of being DIN-rail mounted.

ix. Provide the type and quantity of terminals as shown in the Contract documents.

c. Provide service entrance terminal blocks meeting the following requirements:

i. Make the terminal block for the 120 VAC field cabinet service entrance a 0.39 in. (10 mm) single level screw type device.

ii. Provide a terminal block that accommodates No. 18 to No. 4 AWG wiring for terminating electrical inputs and outputs.

d. Provide distribution terminal blocks meeting the following requirements:

i. Make the terminal blocks for distribution of 120 VAC and ground a 0.24 in. (6 mm) single level screw type located on the protected side of the power service panel assembly.

ii. Provide terminal block that accommodates No. 22 to No. 6 AWG wiring and provide in colors as specified herein.

e. Provide circuit breakers meeting the following requirements:

i. Provide enclosed, thermal magnetic molded case circuit breakers of the types, sizes, and quantities listed in the Contract documents.

ii. Provide a design that allows for an additional three circuit breakers.

iii. Provide two-pole (2P) breakers for 120/240 VAC and single-pole (1P) for 120 VAC single-phase operating voltages.

iv. Provide molded case circuit breakers that comply with and are listed with UL 489.

v. Provide molded case circuit breakers that comply with NEMA AB-1.

vi. Provide circuit breakers that have the amperage rating indicated on the face of the breaker or handle.

vii. Provide circuit breakers that have a quick-make, quick-break over center toggle-type mechanism and a position between “ON” and “OFF” when tripped automatically.

viii. Provide circuit breakers that are 120 VAC rated with a minimum symmetrical interrupting short circuit capacity of 10 kA.

ix. Use only circuit breakers that are DIN rail mounted.

f. Provide fuses meeting the following requirements:

i. Provide DIN rail-mounted switch or disconnect type fuse holders and fuses for low voltage AC and DC circuits in the proper capacity and configured.

ii. Provide fuse with size rating labeled on the holder or on the panel adjacent to the holder.

g. Provide end brackets and spacers meeting the following requirements:

i. Provide screw-clamp end brackets for DIN rail mounting.

ii. Provide spacers or dividers between terminal blocks and other components as shown in the Contract documents for visual separation.

iii. Provide spacers that snap on to DIN rail that are approximately 0.20 in. (5 mm) to 0.71 in. (18 mm) thick and match the size of the terminals they separate.

h. Provide safety cover meeting the following requirements:

i. Provide safety covers on terminal blocks to prevent contact with exposed conductors or any metallic components. This cover will provide electrical and visual separation between terminal blocks and other rail-mounted devices.

ii. Provide safety covers that are approximately 0.08 in. (2 mm) thick and sized to match the terminal blocks they protect or separate.

i. Provide internal wiring meeting the following requirements:

i. Provide insulated wiring that is appropriately sized between terminal blocks and attached devices.

ii. Utilize THHN-THWN, stranded, copper wiring for internal branch circuits. Wire size shall be compliant with the NEC.

iii. Use a minimum No. 12 AWG grounding of each SPD, or larger if recommended by the SPD manufacturer or indicated on the Contract documents.

iv. Use insulated green wire to connect the ground wire directly to the ground terminals.

v. Do not splice together different device grounding wires including surge protectors.

j. Provide GFI service outlet meeting the following requirements:

i. Provide one duplex, NEMA 15A, 5-15R, GFI duplex receptacle (convenience service outlet) with ground-fault circuit interrupters, box, and cover plate able to be accessed after equipment is installed within the field cabinet.

ii. Provide a UL-listed receptacle meeting Federal Specification #W-C-596.

k. Provide a ground buss bar of copper alloy material compatible with copper wire and provide at least two positions where a No. 2 AWG stranded copper wire can be attached.

l. Provide field cabinets that comply with the NEC and grounding and bonding requirements in Section 682 and as required and recommended by the cabinet manufacturer.

6. Provide field cabinet with surge protection meeting the following SPD requirements:

a. Provide a Type 1 SPD for the field cabinet's main AC power input on the load side of the field cabinet circuit breaker. Other surge protection devices are covered under individual device specifications.

b. Provide SPD that is listed per UL 1449 4th edition, Open-Type 1, or latest edition. The SPD shall be listed by NRTL.

c. Provide SPD that meets the following minimum performance requirements:

i. Posted at UL.com under certification with 20 kA I-nominal rating.

ii. Does not exceed the VPR and MCOV requirements listed in Table 4.

Table 4 – VPR and MCOV Surge Requirements			
	L-N	L-G	N-G
VPR	800V	1,500V	1,200V
MCOV	150V	150V	150V

iii. SCCR that equals or exceeds 100 kA.

iv. Maximum surge current rating (Imax) that equals or exceeds 50 kA per mode and 100 kA per phase (sum of L-N plus L-G).

d. Provide SPD that has no leakage current to ground.

e. Provide SPD that supports bi-directional operation.

f. Include directly connected thermally protected MOVs.

g. Provide pluggable SPD modules.

h. Provide SPD that complies with IEEE C62.45, C62.41.1, and C62.41.2 rated for NEMA TS 2 temperature and humidity requirements.

i. Provide SPD enclosure with a NEMA 4 rating.

j. Provide SPD that can be either wall/panel or DIN rail mounted.

k. Provide SPDs that are equipped with a visual indicator for each MOV and remote alarm monitoring.

l. Provide parts that are made of corrosion-resistant materials, such as plastic, stainless steel, anodized aluminum, brass, or gold-plated metal.

7. Provide field cabinet with rack-mounted power strip meeting the following requirements:

a. Provide power strip with a maximum ampere rating of 15A, 120 VAC, 60 Hz.

b. Provide power strip with integrated surge protection meeting the following minimum requirements:

i. Listed per UL 1449 4th edition, or latest edition.

ii. Exceeds IEEE 587 Category A and B specifications.

iii. Minimum UL 1449 let-through voltage rating of less than 330V (RMS).

iv. Minimum AC suppression joule rating of 600 J.

v. AC suppression surge current rating of 20,000A.

vi. Minimum UL 1283 EMI/RFI noise filtering protection rating of 40 dB.

vii. LED status indicators.

c. Provide minimum of eight NEMA 5-15R receptacles or as specified in the Contract documents. Provide spacing to accommodate a minimum of four plug-in power supplies without covering up remaining outlets.

d. Mount the power strip on the rear near the top of the standard TIA-310-D rack cage. Mount the power strip facing toward the back of the field cabinet providing a minimum spacing of 3 in. (76 mm) between the outlet's face and the field cabinet door when the door is closed.

e. Provide power strip that does not hinder accessibility to the back of existing electrical equipment.

8. Provide field cabinet with interior lighting meeting the following requirements:

a. Provide field cabinet with LED lights at the front and back.

b. Equip the field cabinet with a manual on/off switch for the LED lights that are connected to a door switch that allows the lights to be powered when the field cabinet door is open.

9. Provide field cabinet with mechanical locks meeting the following requirements:

a. Equip the main field cabinet door with mechanical locks that accept No. 2 Corbin keys. Provide two sets of keys with each field cabinet.

b. Provide door that has a lockable three-point latch mechanism and can accept a cyber lock with 3/8 in. shackle.

10. Provide field cabinet with temperature system meeting the following requirements:

a. Provide a thermostatically controlled ventilation blower fan(s) to maintain internal temperatures below the upper operating temperature thresholds for installed equipment and components that are operating continuously at full capacity.

b. Provide the field cabinet with the capability for the user to set temperature thresholds that automatically activate the fan(s) to turn on or off when the internal field cabinet temperature exceeds the threshold.

11. Provide field cabinet with ventilation and air filter system meeting the following requirements:

a. Provide ventilation and air filter system that is designed so that openings prevent the entrance of dust, insects, and other foreign matter.

b. Provide washable, removable, and reusable air filters.

c. Provide ventilation and air filter system with bottom trough to drain any accumulated moisture to the outside of the field cabinet.

d. For Type 1, provide one 100 cubic feet (2.83 cubic meters) per minute (cfm) (minimum) 120 VAC blower exhaust fan mounted near the top of the field cabinet.

e. For Types 2, 3 and 4, provide two 100 cfm (2.83 cubic meters per minute) (minimum) 120 VAC blower exhaust fans mounted near the top of the field cabinet.

12. Provide field cabinet with cable and wire management system meeting the following requirements:

a. Provide vertical and horizontal cable management as shown in the Contract documents or as approved by the Department.

b. Provide field cabinet with a cable and wire management system for AC branch, low-voltage power, and communications/data wiring within the field cabinet.

c. Provide cable and wire management components attached to the field cabinet/rack cage with screws. No adhesive or self-stick mounting is permitted.

d. Provide separate wire management for power and other field cabinet low-voltage and communications wiring.

e. Type 4 cabinet only, provide a minimum of four wiring pass-through holes on the inside side-mounting panels to permit patch cords to pass between the two cabinet sides:

i. Provide 5 in. (127 mm) pass-through holes that are outfitted with grommets for patch cord protection, with the holes positioned with two in the cabinet front and two in the cabinet rear and aligning horizontally between the two side panels.

ii. Provide plastic- or rubber-coated J-hooks or D-rings, minimum 1 in. (25 mm) depth and height, on the inside rails of the rack cabinet cages, to organize patch cords passing between the two cabinet sides.

939.2.07 Field UPS Requirements

A. General

1. Provide an industrial-grade UPS that is a double-conversion, on-line type.

2. Provide UPS that complies with UL 1778 standard.

3. Provide one or more of the field UPS types listed in Table 5.

Table 5 – UPS Types		
Type	**Location**	**UPS Output Power Capacity (full load)**
Type 1	Field Cabinet	350W
Type 2	Field Cabinet	800W
Hub	Hub Building	1900W

B. Functional Requirements

1. Provide UPS that is a buck / boost, line-interactive system.
   a. The buck / boost mode of the BBS shall have a minimum range of 90 – 150 VAC.
   b. Buck / boost mode shall not have a user configurable transfer set point.
   c. Buck / boost mode shall regulate the system output between 100 – 130 VAC.
   d. When the output of the system can no longer be maintained within that range, the UPS shall transfer to backup mode.
2. Provide UPS output that is a pure sine wave at 120 VAC ±3% at 50/60 Hz (±0.3% maximum).
3. Provide UPS with a total harmonic distortion of <3% (resistive load).
4. Provide a minimum of four output receptacles type NEMA 5-15R.
5. Provide UPS with an external, make-before-break maintenance bypass capability.
6. Provide UPS with a minimum of 85% efficiency (AC-to-AC).
7. Provide UPS that supports a minimum transfer time of 0 ms for line fails/recovers, and 5 ms or less for UPS to bypass and reverse.
8. Provide UPS with LCD display for monitoring unit.
9. Provide UPS with four dry contact closures.
10. Provide UPS with automatic low-battery and high temperature shutdown features.
11. Provide UPS that will return to normal operations without a manual reset.
12. Provide UPS with a maximum audible noise of <50 dBA at 3 ft. (0.9 m).
13. Provide UPS with battery bank(s) that mount on an EIA 19 in. (483 mm) rack using a maximum space of five rack units.

C. Battery System

1. Provide maintenance-free sealed batteries that can be replaced separately from the UPS.
2. Provide batteries that are rated for extreme temperatures that have been field proven and tested.
3. Provide UPS batteries that maintain 70% of original capacity for a minimum of five years.
4. Provide a maximum battery recharge time of 20 hours to 80% of full charge.
5. Provide battery charger with a minimum of three-stage, temperature compensated charging and keeps the batteries above a minimum depth of discharge point of 50% or as recommended by the manufacturer.
6. Provide user-replaceable and hot-swappable battery packs.
7. Provide batteries with non-conductive terminal covers.

8. Provide battery capacity to meet the following minimum runtimes:
   a. For Type 1 and 2 field UPS, minimum runtime of 1 hour under full load as shown in Table 5.
   b. For hub UPS only, minimum runtime of 4 hours under full load as shown in Table 5.
   c. Capability to be expanded for increased runtime using additional expansion battery banks or packs.

D. Environmental

1. Provide a UPS system including battery bank that meets following minimum requirements:
2. For Types 1 and 2 field UPS, ambient temperature range from –4°F through +131°F (–20°C through +55°C).
3. For hub UPS, ambient temperature range from +32°F through +104°F (0°C through +40°C).
4. Relative humidity from 10% through 95%, noncondensing.
5. Comply with FCC Part 15 emission standard and FCC Public Notice 2019-01.

E. Remote Monitoring Requirements

1. Provide UPS that supports local and remote monitoring and control via Ethernet port interface.
2. Provide remote environmental sensing hardware and software integrated with SNMP minimally capable of temperature and including generating alarms for low battery, over/under voltage, over/under frequency, and high temperature.
3. Provide an addressable SNMP command set including, at a minimum:
   a. UPS state.
   b. Battery condition (voltage, sampling temperature of one battery).
   c. Current AC input conditions (voltage, frequency).
   d. Current AC output conditions (voltage, AC amps, frequency).
   e. Diagnostic/self-test control and status.

939.2.08 Solar Power System Requirements

A. General

1. Provide solar power system that can be mounted in a permanent configuration or in a temporary portable type configuration.
2. Provide one or more of the solar power system types listed in Table 6 as specified in the Contract documents.

Table 6 – Solar Power System Types

Type	Application	Location	Site Output Power Capacity (full load)
Type 1	ITS	Field Cabinet	350W (8,400 Whr/day)
Type 2	ITS	Field Cabinet	800W (19,200 Whr/day)
Type 3	Lighting	Lighting Controller	Calculate based on the quantity, power requirements, and maximum hours of operation of luminaires

B. System Requirements

1. Provide DC-to-DC and DC-to-AC conversion equipment, as specified herein.
2. Provide grounding that meets NEC ampacity requirements.
3. Provide system cabling that meets NEC ampacity requirements.

4. Provide over-current protection devices (OCPD) between each of the solar array, solar controller, battery bank, inverter, and load for safety and maintenance.
5. Provide system that maintains the battery depth of discharge (DoD) between 20% and 50% to maximize battery life using 3 days of autonomy (DoA).
6. Recharge ratio
   a. ITS applications: minimum of 4 times
   b. Lighting applications: minimum of 3 times

C. Solar Panel

1. Provide high-efficiency, photovoltaic solar panel(s) made from tempered glass with an anodized aluminum frame, sized to provide full charging of batteries within a one day full sunlight cycle while under operation in December.
2. Provide solar panels that deliver power for the equipment at the site such that it operates using the lowest average winter insolation values for the area in which the system is installed, accounting for system inefficiencies.
3. Provide IP67-rated junction boxes on the backside of the panel.
4. Provide bypass diodes to minimize power drop caused by shade and provide better performance in low-light conditions.
5. Provide a power max rating of 70% minimum at nominal operating cell temperature (NOCT).
6. Provide a 25-year degradation that has a minimum 80% efficiency rating.

D. Battery

1. Provide batteries that are individually replaceable, completely sealed, and maintenance free, requiring no watering.
2. Provide battery capacity (amp-hours) and type that will keep field cabinet equipment operating for a minimum of 72 hours without sunlight or charging of the batteries. Include a 20% safety factor to ensure operation in unseasonable weather conditions and battery degradation over time.
3. Provide batteries based on the system constraints that maintain deep cycle capacity for a minimum of five years.
4. Provide batteries with non-conductive terminal covers.
5. Provide ventilated enclosure with positive and negative air flow for the batteries.
6. Provide temperature sensors that are mounted to the side of the battery case and generally in the middle of the battery bank.

E. Charge Controller

1. Provide a minimum 30A rated maximum power point tracker (MPPT) charge controller that charges 12, 24, and 48V banks.
2. Provide charge controller that supports the selected battery type.
3. Provide charge controller with built-in energy LCD monitor to track and indicate the state of charge, voltage level of the batteries, and output of the solar panels.
4. Provide charge controller that keeps the batteries above the minimum depth of discharge point of 50% or as recommended by the battery manufacturer.
5. Provide charge controller with data logging capabilities that can be viewed over the network.
6. Provide charge controller that disconnects the equipment from the batteries at a variable percentage load and allows the batteries to reach a higher state of charge, commonly referred to as a low voltage disconnect feature.

F. Power Inverter

1. Provide power inverter as follows:
   a. ITS application: provide a true sine wave DC to 120 VAC ±5% rated for off-grid solar application.

   b. Lighting application: 120 or 12/240 VAC.

2. Provide power inverter that meets the continuous power wattage (total load capacity) requirements of the field cabinet equipment and components.
3. Provide power inverter with a minimum surge rating that is double the continuous power wattage calculation to support equipment start-up power needs (peak power).
4. Provide power inverter with a power factor of 0.9 to 1.0.
5. Provide circuit breakers sized for the system and placed between the inverter and load, and between the inverter and battery bank.
6. Provide power inverter sized for the system criteria, and with a minimum of three NEMA 5-15R, 15A outlet receptacles.
7. Provide a power distribution panel in conjunction with the inverter.

G. Environmental

1. Provide solar panels, charge controller, inverter, and battery bank that meet the following minimum temperature and humidity requirements:
2. Ambient temperature range from –4°F through +131°F (–20°C through +55°C).
3. Relative humidity from 10% through 95%, noncondensing.
4. Provide battery bank that is ventilated with fans that push and pull air within the enclosure.
5. Comply with FCC Part 15 emission standard and FCC Public Notice 2019-01.

939.2.09 Field Power Controller Requirements

A. General

1. Provide field power controller that is IP-addressable (static) and accessible over a network.
2. Provide field power controller with a 10/100 autosensing, port selectable, RJ-45 Ethernet interface.
3. Provide field power controller that can reboot and control outlet receptacles in remote locations from a web browser.
4. Provide secure control through a user web interface, including SSL and multi-user password secure access.
5. Provide a minimum of 18 NEMA 5-15R, 15A outlet receptacles with eight switched pairs and two un-switched receptacles.
6. Provide a user-configurable automatic ping feature that monitors and automatically cycles power on one or more receptacles.
7. Provide a minimum surge protection using dual 3,600 J MOVs to clamp power surges and spikes.
8. Provide field power controller with configurable event data logging.
9. Provide field power controller that mounts on an EIA 19 in (483 mm) rack (maximum space of two rack units) inside a standard field cabinet or hub building rack.

B. Environmental

1. Provide field power controller including power supply that comply with NEMA TS 2 Sections 2.1.7, 2.1.8, and temperature, humidity, vibration, and shock testing requirements.
2. Comply with FCC Part 15 emission standard and FCC Public Notice 2019-01.

939.2.10 Security Lock Requirements

A. Provide security lock that meets the following requirements:

1. Provide a wireless electronic key security lock system that is compatible with the Department's existing programming equipment. The Department's existing security lock system uses Cyberlock equipment.
2. Provide security lock system that controls access to specific field cabinet(s) on an individual basis.
3. Provide security lock system that has no pick-able keyway.
4. Provide cylinder that can retrofit existing field cabinet mechanical lock hardware.
5. Provide electronic key with key memory that stores access schedules and a list of locks it can open.
6. Provide cylinder and electronic key that are manufactured with a unique ID that cannot be changed or duplicated.
7. Provide rechargeable batteries.

939.2.11 Not Applicable

A. Not Applicable

B. Not Applicable

C. Not Applicable

D. Not Applicable

E. Not Applicable

939.3 Construction

The construction and installation of the network and field cabinet equipment, materials, components, and assemblies as specified shall meet the requirements in this section and the manufacturer's installation requirements and recommendations.

939.3.01 Construction Requirements

A. General Construction

1. Install network switches, field cabinets and components, UPS and battery systems, and solar power components as required by the Contract documents and recommended by the manufacturer.
2. Install equipment in new or existing rack space in accordance with the equipment manufacturer's recommendations, including mounting, interconnection wiring and electrical service.
3. Furnish and install mounting hardware and incidental materials, including fasteners and auxiliary supporting frames/brackets, as recommended by the manufacturer.
4. Furnish and install miscellaneous hardware, materials, wiring/cabling, configuration, and any other incidental items necessary for fully operational components and subsystems shown in the Contract documents and Section 942, except when specifically identified as existing or as work to be performed by the Department.
5. Coordinate access to Department buildings, hub buildings, and field cabinets for all work activities required in these locations with the Department 10 days before access is needed.
6. Work on this Project requires system configuration and integration tasks to be performed by the Department before some Contractor-installed items can be brought online and completely system tested. Coordinate all work activities needing system configuration with the Department a minimum of 14 calendar days prior to any testing.
7. Provide properly sized electrical service, including grounding and current rating, in the equipment racks for all hardware installed. Furnish and install additional power outlet strips in new and existing equipment racks if needed for the new equipment.
8. Coordinate with the Department to establish electrical utility service according to the NEC and as specified in Section 682.
9. Verify with the local power service provider to ensure that the provided equipment is compatible with the installed equipment.

10. Contractor shall be responsible for paying for electrical service as required from the time of testing up to the issuance of the MAL by the Department at which time the service provider account shall be transferred to the Department.
11. Comply with grounding and bonding requirements in Section 682 for field cabinet and components, and as required and recommended by the field cabinet and equipment manufacturer(s).
12. For any equipment that is not rack mountable with “rack ears,” provide perforated shelves and secure shelf-mounted equipment with rack mounting hardware.
13. Protect cable ends at all times with end caps. Never subject any cable to exceed its minimum bend radius as recommended by the manufacturer.
14. Terminate ground wiring for field cabinet surge protectors to the field cabinet ground buss bar that terminates the ground conductor to the field cabinet ground rod.
15. Dress and route grounding wires separately from all other field cabinet wiring.
16. Install grounding wires with the absolute minimum length possible between the surge protector and the ground terminals.
17. Provide grommets, guides, and strain relief material where necessary to avoid abrasion of or excess tension on wire and cable.
18. Neatly route, dress, and secure patch cords in the equipment racks and at both ends. Use all available cable management devices and trays. Route patch cords only vertically on the sides of the equipment racks or horizontally across the bottom or top of the racks; no diagonal routing is permitted. Follow manufacturer’s recommendations including bend radius requirements during patch cord installation.
19. Store uninstalled cable according to manufacturer recommended bend radius and cable reel requirements.
20. Inspect and test cables for continuity when received, with results compared with factory pre-shipping tests. If test results differ from factory pre-shipping tests by more than 10%, notify the supplier (or manufacturer) of discrepancies for immediate correction.
21. Bond all rack cages in field cabinets in accordance with the approved manufacturer’s installation specification.
22. Ground all field cabinet rack cages to the single-point ground for the site.
23. Provide grounding and lightning protection for all cable runs at the top of the ITS device support structures and at the field cabinet entry port.
24. If the field cabinet and associated entry port is not collocated on the support structure, provide grounding and lightning protection at the bottom of the support structure.
25. Provide equipment with readily accessible, manually re-settable or replaceable circuit protection devices (such as circuit breakers or fuses) for equipment and power source protection.
26. Provide and size circuit breakers or fuses such that no wire, component, connector, PC board, or assembly must be subjected to sustained current in excess of their respective design limits upon the failure of any single circuit element or wiring.

B. Communications Subsystem

1. Install communications network equipment and materials necessary for a complete communications path from the field site to the TMC or communications hub building as shown in the Contract documents.
2. Furnish and install mounting and interconnection materials, including but not limited to mounting panels and rack hardware, fiber and Category-6 patch/jumper cables, surge protection, and power supply cables.
3. Mount field equipment in a manner so as to not restrict the replacement of other components in the field cabinet housing or hub building.

C. Uninterruptible Power Supply

1. Install UPS and battery bank or pack in the field cabinet rack and hub building equipment rack.

2. Furnish and install a dedicated electrical service branch circuit from the hub building main service panel for the UPS system.
3. Provide UPS system branch circuit that is in accordance with all recommendations of the UPS manufacturer, including the provision of a locking plug/receptacle connection.
4. Locate the branch circuit receptacle as close as possible to the UPS mounting position to minimize the UPS input line cord and to minimize tripping hazards.
5. Configure the electrical service inputs for network switches and other equipment to be supplied by the UPS.
6. Furnish and install line cords, power strips, and incidental materials to configure the UPS service to the above equipment.

D. Solar Power System

1. Install and mount the solar panel(s) with mounting bracket and the field cabinet on the ITS pole or structure at heights specified in the Contract documents or as directed by the Department.
2. The installation locations of poles and structures may require slight adjustments to maximize sun exposure for the solar panel assembly. Obtain approval of final site location and orientation from the Department prior to installation.
3. Install solar power system in accordance with the manufacturer's recommended installation procedures and the Contract documents.
4. Mount and orient the solar panel(s) to maximize sun exposure in accordance with the manufacturer's recommendations.
5. Mount panels at an angle to enable runoff of rain and snow.
6. Provide power from the solar power assembly to the controller cabinet by connecting to the UPS in the cabinet.
7. Provide no exposed wires from the solar panel(s) to the battery and from the battery to the charge controller.
8. Install wires in liquid tight flexible conduit, run inside a pole, or other method approved by the Department. The cost to furnish and install any conduit for the solar power assembly installation shall be included in the cost of the solar power assembly.
9. Electrically ground the solar power assembly in accordance with manufacturer recommendations.

E. Patch Cables and Labeling

1. Label wiring and cabling, including entrance cables, jumper and patch cords, and power supply cables. Cable labels shall consist of UV-protected, waterproof permanent ink printed or legibly written on self-laminating and over-wrapping label material.
2. Apply cable labels at each end and in the center of the cable. Cable labels shall consist of permanent ink printed or legibly written on self-laminating and over-wrapping label material.
3. Label patch cords using cable identification numbers shown in the Contract documents or provided by the Department.
4. Apply cable labels at each end and in the center of the cable.

F. Security Lock

1. For an existing cabinet, remove existing lock cylinder and install electronic lock.
2. Provide electronic key to the Department 30 calendar days prior to the installation of field cabinet(s) that require a security lock.
3. The Department will have 20 calendar days from the time that all keys and locks are provided to program the keys and locks.
4. Provide one electronic key per electronic lock. All electronic keys and locks will become the property of the Department at the end of the construction job. All keys shall be turned in to the Department's ITS Project Manager prior to the issuance of the MAL by the Department.

939.3.02 Equipment Configuration and Integration Requirements

Refer to Section 942.3.03 for network equipment configuration and integration requirements.

939.3.03 Testing Requirements

Refer to Section 942.3.04 for testing requirements.

939.3.04 Training Requirements

Refer to Section 942.3.05 for training requirements.

939.3.05 Warranty and Maintenance Support Services

A. Warranty Requirements

1. Provide a minimum warranty length as follows. If the manufacturer's warranties for the components are for a longer period, those longer period warranties shall apply.
   a. Field switch: five years.
   b. Routing switch: five years.
   c. Surge protectors: five years.
   d. UPS and battery system: three years.
   e. All other equipment and materials furnished and installed as part of this section: two years.
2. Refer to Section 942.3.02 for general warranty requirements.

B. Maintenance Support Services

Refer to Section 942.3.02 for maintenance support services requirements.

939.4 Measurement

The network equipment, field cabinets and components, UPS battery back-up systems, solar equipment, surge protection, and communication cables defined herein and training that are complete, in place, accepted, and of the kind, size, and type specified will be measured as follows:

A. Field Switch

Field switches (all types) with mounting hardware will be measured for payment by the number installed, complete, functional, tested, and accepted. This price will be full compensation for labor, tools, materials, equipment, and incidentals necessary to complete the work.

B. SFP Fiber Module

SFP fiber modules (all types) will be measured for payment by the number installed, complete, functional, tested, and accepted. This price will be full compensation for labor, tools, materials, equipment, and incidentals necessary to complete the work.

C. Routing Switch

Routing switches (all types) with mounting hardware will be measured for payment by the number installed, complete, functional, tested, and accepted. This price will be full compensation for labor, tools, materials, equipment, and incidentals necessary to complete the work.

D. Field Cabinet

Field cabinets will be measured for payment by the number actually installed, complete, functional, and accepted. For each unit installed, furnish all required items, including but not limited to; identification and documentation, cabinet shell, rack cage, cabinet lighting, electrical service, power strip, ventilation system including heater, locks, internal wiring, cabling, and wire management, surge protection, grounding and bonding, and all other components and materials specified herein and required for a complete field cabinet.

E. Solar Power System

Solar power system (all types) with all required components and materials as specified herein including panel mounting hardware will be measured for payment by the number installed, complete, functional, tested and accepted. This price will be full compensation for labor, tools, materials, equipment, and incidentals necessary to complete the work.

F. Field UPS

Field UPS (all types) with all required components and materials as specified herein including panel mounting hardware will be measured for payment by the number installed, complete, functional, tested and accepted. This price will be full compensation for labor, tools, materials, equipment, and incidentals necessary to complete the work.

G. Field Power Controller

Field Power Controller with all required components and materials as specified herein including panel mounting hardware will be measured for payment by the number installed, complete, functional, tested and accepted.

This price will be full compensation for labor, tools, materials, equipment, and incidentals necessary to complete the work.

H. Not Applicable

I. Not Applicable

J. Not Applicable

K. Not Applicable

L. Security Lock

Security lock will be measured for payment by the actual number furnished and installed. Provide lock cylinder and electronic key along with all other components and materials required or necessary for a complete security system. This price will be full compensation for labor, tools, materials, equipment, and incidentals necessary to complete the work.

M. Training

Training will be measured as a lump sum for supplies, equipment, materials, handouts, travel, and subsistence necessary to conduct the training.

939.5 Payment

939.5.01 Communications and Electronic Equipment

Communications and electronic equipment of the type specified in the Contract documents will be paid for at the Contract unit price. Payment is full compensation for furnishing and installing or delivering the communications and electronic equipment. This price will include full compensation for labor, materials, equipment, tools, test equipment, incidentals, installation, testing, and providing warranty necessary to complete the work as described in this section.

<u>Payment Notes:</u>

Submittal

Submittal requirements are included in Section 942.1.04 and will not be paid for separately. It will be considered incidental to the communications and electronic equipment pay items.

Testing

Testing is defined in Section 942.3.04 and will not be paid for separately. It will be considered incidental to the communications and electronic equipment pay items.

GDOT Central Software Integration

GDOT Central Software integration is included in Section 942.3.03 and will be paid for separately under the Section 942.5 pay item.

Payment for communications and electronic equipment will be made under:

Item No. 939	Field Switch, Type ____	Per each
Item No. 939	SFP Fiber Module, Type ____	Per each
Item No. 939	Routing Switch, Hub, Type ____	Per each
Item No. 939	Field Cabinet, Type ____	Per each
Item No. 939	Security Lock	Per each
Item No. 939	Solar Power System, Type ____	Per each
Item No. 939	Hub UPS	Per each
Item No. 939	Field UPS, Type ____	Per each
Item No. 939	Field Power Controller	Per each

939.5.02 Training

Payment for training will be made under:

Item No. 939	Training	Lump sum

Revised for Cobb County

Section 942 – ITS General Requirements (CCTV)

942.1 General Description

This section includes general requirements in support of the ITS specifications and defines the following procedures: submittal process and requirements, construction management, maintenance support, testing, training, final inspection, and close-out. In addition, the pay item defined in Section 942 includes work related to equipment configuration and integration services for pay items included in their respective sections.

942.1.01 Definitions, Acronyms, and Abbreviations

A. Definitions

The following definitions are common to all ITS specifications:

1. **Acceptance Test:** consists of two sub-tests, including system operational test (all sections) and burn-in test (all sections). These tests verify full device and system functionality and performance over the network in day-to-day operations.
2. **Authority Having Jurisdiction (AHJ):** refers to GDOT districts, counties, or local municipalities.
3. **Dead Zone:** a “peak” or “blind spot” on an OTDR trace where no measurement can be made. Dead zones are prominent at the beginning of a trace or at any other high reflectance event.
4. **End-to-End Segment:** also called end-to-end link. The overall segment(s) of fiber optic cable being tested, including, connectors and splices, from patch panel to patch panel.
5. **Failure:** ITS device or ancillary equipment element becoming unable to comply with the Project requirements and applicable standards described in the Contract documents.
6. **GDOT Central Software:** software and hardware system that controls and monitors associated ITS devices in the Contract.
7. **ITS Specifications:** specifications that include materials, construction, measurement, and payment requirements for the following sections: 631, 694, 926, 935, 936, 937 (except material that applies to traffic signal installations and other applications as noted in the specification), and 939.
8. **Maintenance Acceptance Letter (MAL):** letter issued by the Department when acceptance test, final inspection, and close-out activities as specified herein, including all punch list items, have been completed by the Contractor and approved by the Department. The Department may also choose to issue a partial MAL for specific ITS devices.
9. **Network Equipment:** equipment defined in Sections 631, 694, 926, 935, 936, 937, and 939 that communicates with an Ethernet interface.
10. **Pre-Installation Test:** consists of two sub-tests including (1) fiber optic reel test (Section 935) and (2) DMS test (Section 631). These tests verify setup, device inspection, basic DMS functionality, and fiber optic attenuation and continuity test on the reel.
11. **Repair Time:** the time it takes, exclusive of requirements for the coordination of any lane closures, to diagnose, repair, and re-establish full functionality and operations of the site(s).
12. **Response Time:** the time it takes the Contractor to mobilize repair technician(s) from the time they receive the problem notification from the Department and arrive at the site(s).
13. **Stand-Alone Test:** consists of three sub-tests including (1) field site test (all sections), (2) local operational tests (all sections), and (3) fiber optic post-installation test (Section 935 only). These tests verify device functionality locally prior to connecting to the network, and complete fiber optic testing from patch panel to patch panel.
14. **Submittal:** documentation required by the Contract that the Contractor must submit for the Department’s review, acceptance, or approval. Submittals may include product cut-sheets, shop drawings, working drawings, material test reports, material certifications, Project progress schedules, and schedule updates.

B. Acronyms and Abbreviations

The following acronyms, abbreviations, and terminology are used throughout the ITS specifications:

1.	AASHTO	American Association of State Highway and Transportation Officials
2.	AC	Alternating Current
3.	ACR	Attenuation to Crosstalk Ratio
4.	ACEI	Association Connecting Electronic Industries
5.	ACL	Access Control List
6.	ACP	Auxiliary Control Panel
7.	AES	Advanced Encryption Standard
8.	AHJ	Authority Having Jurisdiction
9.	ANSI	American National Standards Institute
10.	ASCE	American Society of Civil Departments
11.	ASCII	American Standard Computer Information Interface (a text file format)
12.	ASTM	American Society for Testing and Materials
13.	ATMS	Advanced Traffic Management System
14.	AWG	American Wire Gauge
15.	AWS	American Welding Society
16.	BPDU	Bridge Protocol Data Unit
17.	BGP	Border Gateway Protocol
18.	BICSI	Building Industry Consulting Service International
19.	BMP	Bit Map
20.	BNC	Bayonet Neill-Concelman (a video connector)
21.	BPSK	Binary Phase-Shift Keying
22.	CAT	Category
23.	CCD	Charge-Coupled-Device
24.	CCTV	Closed Circuit Television
25.	CD	Compact Disc
26.	CEI	Construction Engineering and Inspection
27.	CFR	Code of Federal Regulations
28.	CLD	Camera Lowering Device
29.	CLI	Command Line Interface
30.	CMOS	Complementary Metal-Oxide-Semiconductor
31.	CMS	Changeable Message Sign

32.	CMX	Communications Cable Limited Use
33.	COTS	Commercial Off-The-Shelf
34.	dBA	decibels, A-weighted
35.	dBi	decibels, isotropic
36.	DC	Direct Current
37.	DHCP	Dynamic Host Control Protocol
38.	DIN	Deutsche Industrie Norm
39.	DMS	Dynamic Message Sign
40.	DNS	Domain Name System
41.	DoA	Days of Autonomy
42.	DoD	Depth of Discharge
43.	DoS	Denial of Service
44.	DSP	Digital Signal Processing
45.	DSSS	Direct Sequence Spread Spectrum
46.	DVD	Digital Video Disc
47.	ECB	Electrical Communications Box
48.	EIRP	Effective Isotropic Radiated Power
49.	EIS	Electronic Image Stabilization
50.	EMC	Electromagnetic Compatibility
51.	EMI	Electromagnetic Interference
52.	EPA	Effective Projected Area
53.	ESS	Environmental Sensor Station
54.	ETL	Electrical Testing Laboratories
55.	FAA	Federal Aviation Administration
56.	FCC	Federal Communications Commission
57.	FDU	Fiber Distribution Unit
58.	FOTP	Fiber Optic Test Procedure
59.	FPP	Fiber Patch Panel
60.	fps	Frames per Second
61.	FTP	File Transfer Protocol
62.	GBIC	Gigabit Interface Converter
63.	GDOT	Georgia Department of Transportation
64.	GFI	Ground Fault Interrupter
65.	GIF	Graphics Interchange Format

66.	GMRP	Generic Multicast Registration Protocol
67.	GPS	Global Positioning System
68.	GVRP	Generic VLAN Registration Protocol
69.	HASB	High-Airspeed Blowing
70.	HD	High Definition
71.	HDTV	High Definition Television
72.	HTTP	Hypertext Transfer Protocol
73.	HTTPS	HTTP Secure
74.	ICEA	Insulated Cable Departments Association
75.	IEC	International Electrotechnical Commission
76.	IEEE	Institute of Electrical and Electronics Departments
77.	IGMP	Internet Group Management Protocol
78.	IP	Internet Protocol
79.	IP-Sec	IP Security
80.	IPC	Institute for Printed Circuits
81.	IR	Infrared
82.	IRE	Institute of Radio Department
83.	ISM	Industrial, Scientific, and Medical
84.	ISO	International Organization for Standardization
85.	ITS	Intelligent Transportation System
86.	ITU-T	International Telecommunication Union-Telecommunication Standardization Sector
87.	LAN	Local Area Network
88.	LC	Lucent Connector
89.	LCD	Liquid Crystal Display
90.	LED	Light Emitting Diode
91.	LLDP	Link Layer Discovery Protocol
92.	LOS	Ling of Sight
93.	LTE	Long-Term Evolution
94.	MAC	Media Access Control
95.	MAL	Maintenance Acceptance Letter
96.	MARR	Maintenance and Repair Request
97.	MCS	Modulation and Coding Scheme
98.	MCOV	Maximum Continuous Operating Voltage
99.	MFES	Managed Field Ethernet Switch

100.	MIL-HDBK	Military Handbook
101.	MIL-STD	Military Standard
102.	MIMO	Multiple-in-Multiple-out
103.	MJPG	Motion Joint Pictures Group
104.	MM	Multimode
105.	MOV	Metal Oxide Varistor
106.	MPPT	Maximum Power Point Tracker
107.	MS	Military Specification (Mil-Spec)
108.	MTBF	Mean Time Between Failure
109.	MUTCD	Manual on Uniform Traffic Control Devices
110.	MVDS	Microwave Vehicle Detection System
111.	NEC	National Electrical Code
112.	NECA	National Electrical Contractors Association
113.	NEMA	National Electrical Manufacturers Association
114.	NFPA	National Fire Protection Association
115.	NLOS	Near Line of Sight
116.	NOCT	Nominal Operating Cell Temperature
117.	NRTL	Nationally Recognized Testing Laboratory
118.	NTCIP	National Transportation Communications for ITS Protocol
119.	NTP	Notice-to-Proceed
120.	NTSC	National Television System Committee
121.	NVRAM	Non-Volatile Random -Access Memory
122.	OFDM	Orthogonal Frequency Division Multiplexing
123.	OFL	Over-filled Launch
124.	ONVIF	Open Network Video Interface Forum
125.	OSHA	Occupational Safety and Health Administration
126.	OSD	On-Screen Display
127.	OSP	Outside Plant
128.	OSPF	Open Shortest Path First
129.	OTDR	Optical Time-Domain Reflectometer
130.	OTO	Office of Traffic Operations
131.	P/T	Pan-Tilt
132.	PDF	Portable Document Format

133.	PDU	Power Distribution Unit
134.	PIM	Protocol Independent Multicast
135.	PMP	Project Management Plan
136.	PNG	Portable Network Graphics
137.	PoE	Power over Ethernet
138.	PRL	Protocol Requirements List
139.	PtP	Point-to-Point
140.	PtMP	Point-to-Multi-point
141.	PTZ	Pan Tilt Zoom
142.	PVC	Polyvinyl Chloride
143.	PWM	Pulse Width Modulation
144.	QoS	Quality of Service
145.	QPL	Qualified Products List
146.	QPSK	Quadrature Phase Shift Keying
147.	RADIUS	Remote Authentication Dial-In User Service
148.	RAM	Random Access Memory
149.	RF	Radiofrequency
150.	RFC	Request for Comments
151.	RFI	Radio Frequency Interference
152.	RGB	Red, Green, Blue
153.	RIP	Routing Information Protocol
154.	RJ-45	Registered Jack (RJ)
155.	RMON	Remote Network Monitoring
156.	RoHS	Restriction of Hazardous Substances
157.	RPM	Rotations per Minute
158.	RPU	Remote Processing Unit
159.	RSTP	Rapid Spanning Tree Protocol
160.	RS-X	Recommended Standard – X=232/422/485 (a standard serial interface)
161.	RTP	Real-time Protocol
162.	RTSP	Real-Time Streaming Protocol
163.	RUS	Rural Utilities Service
164.	SCCR	Short Circuit Current Rating
165.	SCR	Software Change Request
166.	SD	Secure Disk

167.	SFP	Small Form-Factor Pluggable
168.	SM	Single-Mode
169.	SMPTE	Society of Motion Pictures and Television Engineers
170.	SMS	Short Message Service
171.	SNMP	Simple Network Management Protocol
172.	SPD	Surge Protection Device
173.	SSH	Secure Shell Protocol
174.	SSL	Secure Sockets Layer
175.	ST	Straight Tip
176.	TACACS	Terminal Access Controller Access Control System
177.	TB	Terminal Block
178.	TCP/IP	Transmission Control Protocol/Internet Protocol
179.	TFTP	Trivial File Transfer Protocol
180.	TGMB	Telecommunications Grounding Main Buss-bar
181.	THHN	Thermoplastic High Heat Nylon
182.	THWN	Thermoplastic High and Water Nylon Coated
183.	TIA	Telecommunications Industry Association
184.	TMC	Transportation Management Center
185.	UDP	User Datagram Protocol
186.	UHF	Ultra-High Frequency
187.	UL	Underwriters Laboratories
188.	UPC	Ultra Polish Connector
189.	UPS	Uninterruptible Power Service
190.	USDA	United States Department of Agriculture
191.	UV	Ultraviolet
192.	VAC	Volts of Alternating Current
193.	VDC	Volts of Direct Current
194.	VDS	Vehicle Detection System
195.	VHF	Very-High Frequency
196.	VLAN	Virtual Local Area Network (a method of partitioning a physical network)
197.	VPN	Virtual Private Network
198.	VPR	Voltage Protection Rating
199.	VRRP	Virtual Router Redundancy Protocol
200.	VSRP	Virtual Switch Redundancy Protocol

201. VSWR Voltage Standing Wave Ratio

202. WPA Wi-Fi Protected Access

942.1.02 Related References

A. GDOT Standard Specifications

Section 942 provides requirements and specifications that apply to the following sections:

1. Section 631 – Dynamic Message Signs
2. Section 682 – Electrical Wire, Cable, and Conduit
3. Section 694 – Weather Monitoring and Reporting System
4. Section 926 – Wireless Communications Equipment
5. Section 935 – Fiber Optic System
6. Section 936 – Closed Circuit Television (CCTV)
7. Section 937 – Detection Systems
8. Section 939 – Communications and Electronic Equipment

B. Referenced Documents

Standards and documents referenced throughout the ITS specifications are provided in Table 1.

Table 1 – Referenced Documents

Referenced Document	Cited in Section
ASTM A135, Standard Specification for Electric-Resistance-Welded Steel Pipe, latest edition.	935
ASTM B695, Standard Specification for Coatings of Zinc Mechanically Deposited on Iron and Steel, latest edition.	935
ASTM D1248, Standard Specification for Polyethylene Plastics Extrusion Materials for Wire and Cable, latest edition.	935
ASTM F3125, Standard Specification for High Strength Structural Bolts, Steel and Alloy Steel, Heat Treated, 120 ksi (830 MPa) and 150 ksi (1040 MPa) Minimum Tensile Strength, Inch and Metric Dimensions, latest edition.	694
ASTM F593/F594, Standard Specification for Stainless Steel Bolts, Hex Cap Screws, and Studs, latest edition.	694, 935
AWS D1.2, Structural Welding Code – Aluminum, latest edition.	631
EIA-232/422/485, Serial Communications Standard, latest edition	936
FCC Public Notice, Enforcement Advisory No. 2019-02, DA 19-90, February 15, 2019	631
FCC Public Notice, Enforcement Advisory No. 2019-01, DA 19-91, February 15, 2019	631, 694, 926, 936, 939
FCC Part 15 of Title 47 of the CFR, Subpart B, Class B.	631, 694, 926, 936, 939
Federal Specification #W-C-596, General Specification for Electrical Power Connectors, latest edition.	939
ICEA S-56-434, Polyolefin Insulated Communications Cables for Outdoor Use, latest edition.	926, 936

Table 1 – Referenced Documents	
Referenced Document	**Cited in Section**
ICEA S-87-640, Optical Fiber Outside Plant Communications Cable, latest edition.	935
IEC 60529, Degrees of Protection Provided by Enclosures (IP Code), latest edition.	936
IEC EN 50022, Specification for Low Voltage Switchgear and Control Gear for Industrial Use. Mounting Rails. Top Hat Rails 35 mm Wide for Snap-On Mounting of Equipment.	939
IEC EN 60068-2, Environmental Testing Requirements for Electronic Equipment, latest edition.	694
IEC EN 60715, Dimensions of low-voltage switchgear and control gear - Standardized mounting on rails for mechanical support of switchgear, control gear and accessories, latest edition.	939
IEC EN 60793-2-10, Optical Fibers – Part 2-10: Product Specifications – Sectional Specification for Category A1 Multimode Fibers, latest edition.	935
IEC EN 61000-4-5, Electromagnetic compatibility (EMC) - Part 4-5: Testing and measurement techniques - Surge immunity test, latest edition.	694, 926, 939
IEC EN 61000-6-4, Electromagnetic compatibility (EMC) - Part 6-4: Generic standards - Emission standard for industrial environments, latest edition.	936
IEC EN 61326-1, Electrical equipment for measurement, control and laboratory use – EMC requirements – Part 1: General requirements, latest edition.	694
IEEE C62.41.1, IEEE Guide on the Surge Environment in Low-Voltage (1000 V and less) AC Power Circuits.	939
IEEE C62.41.2, IEEE Recommended Practice on Characterization of Surges in Low-Voltage (1000 V and less) AC Power Circuits.	939
IEEE C62.45, IEEE Recommended Practice on Surge Testing for Equipment Connected to Low-Voltage (1000 V and less) AC Power Circuits.	939
IEEE P1222, IEEE Standard for Testing and Performance for All-Dielectric Self-Supporting Fiber Optic Cable for Use on Electric Utility Power Lines.	935
IPC A-610F, Acceptability of Electronic Assemblies, latest edition.	631
ISO 9001, Quality management systems.	631, 694, 926, 935, 936, 939, 942
ISO/IEC 14496-10, H.264, Advanced video coding for generic audiovisual services, latest edition.	936
ITU-T G.652.D, Characteristics of a single-mode optical fibre and cable, latest edition.	935
ITU-T G.657.A1, Characteristics of a bending-loss insensitive single-mode optical fibre and cable, latest edition.	935
Joint AASHTO/ITE/NEMA Committee on the ATC, Intelligent Transportation System (ITS) Standard Specification for Roadside Cabinets (v01.02.17b), latest edition.	939
MIL-HDBK-217F, Military Handbook: Reliability Prediction of Electronic Equipment, latest edition.	926, 939
MIL-STD-810F (Notice 3), Department of Defense Test Method Standard: Environmental Engineering Considerations and Laboratory Tests, latest edition.	936
NEMA 250, Enclosures for Electrical Equipment (1000 Volts Maximum), latest edition.	694, 926, 936
NEMA AB-1, Molded-Case Circuit Breakers, Molded Case Switches, and Circuit-Breaker Enclosures, latest edition.	939
NEMA TS 2, Traffic Controller Assemblies with NTCIP Requirements—Version 03.07, latest edition.	694, 926, 936, 939
NEMA TS 4-2016, Hardware Standards for Dynamic Message Signs (DMS) with NTCIP Requirements, latest edition.	631, 942

Table 1 – Referenced Documents	
Referenced Document	**Cited in Section**
NFPA 70, National Electrical Code, latest edition.	631, 694, 926, 935, 936, 939
NTCIP 1203 v02, NTCIP Object Definitions for Dynamic Message Signs (DMS), latest edition.	631
NTCIP 1204 v03, NTCIP Environmental Sensor Station Interface Standard, latest edition.	694
NTCIP 1205 v01.08, Object Definitions for Closed Circuit Television (CCTV) Camera Control, latest edition.	936
ONVIF Profile S Specification.	936
OSHA, 29 CFR 1910, "Occupational Safety and Health Administration Standards."	631, 935
RoHS Directive 2011/65/EU of the European Parliament and of the Council of 8 June 2011 on the restriction of the use of certain hazardous substances in electrical and electronic equipment.	631, 935
SMPTE 274M, 1920 x 1080 Image Sample Structure, latest edition.	936
SMPTE 296M, 1280 × 720 Progressive Image Sample Structure, latest edition.	936
Telcordia GR-196-CORE, Optical Time Domain Reflectometer (OTDR) Data Format, latest edition.	942
Telcordia GR-20-CORE, Generic Requirements for Optical Fiber and Optical Fiber Cable, latest edition.	935
Telcordia GR-326-CORE, Generic Requirements for Single-Mode Optical Connectors and Jumper Assemblies, latest edition.	935
Telcordia GR-769-CORE, Generic Requirements for Organizer Assemblies, latest edition.	935
Telcordia GR-771-CORE, Generic Requirements for Fiber Optic Splice Closures, latest edition.	935
Telcordia SR-332, Reliability Prediction Procedure for Electronic Equipment, latest edition.	926, 939
TIA-170, Electrical Performance Standard – Monochrome Television Facilities, latest edition.	936
TIA RS-250C, Electrical Performance Standards, latest edition.	939
TIA-310-D, 19-inch Rack Mount Specification, latest edition.	935, 939
TIA-455-A, Standard Test Procedure for Fiber Optic Fibers, Cables, Transducers, Sensors, Connecting and Terminating Devices, and Other Fiber Optic Components, latest edition.	935
TIA-492AAAA-A, Detail Specification for 62.5um Core Diameter/125um Cladding Diameter Class 1a Graded-Index Multimode Fibers, latest edition.	935
TIA-492-CAAB, Detail Specification for Class IVa Dispersion-Unshifted Single-mode Optical Fibers with Low Water Peak, latest edition.	935
TIA-568-B, Commercial Building Wiring Standard, latest edition.	926, 935, 936
TIA-568-C.2, Balanced Twisted-Pair Telecommunications Cabling and Components Standards, latest edition.	926, 936, 939
TIA-568-3.D, Optical Fiber Cabling and Components Standard, latest edition.	935
TIA-598-D, Optical Fiber Cable Color Coding, latest edition.	935
TIA-604-XX, Fiber Optic Connector Intermateability Standards (FOCIS), where XX specifies the fiber optic connector type (i.e., ST, LC, etc.), latest edition.	935

Table 1 – Referenced Documents	
Referenced Document	**Cited in Section**
UL 1059, Standard for Terminal Blocks, latest edition.	939
UL 1283, Standard for Electromagnetic Interference Filters, latest edition.	939
UL 1449, Standard for Surge Protective Devices, 4th edition.	631, 939
UL 1778, Uninterruptible Power Systems, latest edition.	939
UL 444, Communications Cables, latest edition.	926, 936, 939
UL 489, Molded-Case Circuit Breakers, Molded-Case Switches, and Circuit-Breaker Enclosures, latest edition.	939
UL 497B, Standard for Protectors for Data Communications and Fire-Alarm Circuits, latest edition.	694, 926, 936
UL 497E, Outline of Investigation for Protectors for Antenna Lead-In Conductors, latest edition.	926
UL 94, Standard for Tests for Flammability of Plastic Materials for Parts in Devices and Appliances, latest edition.	935
USDA RUS Standard 7 CFR 1755, RUS Specification for Fiber Optic Cables, latest edition.	935

942.1.03 ITS General Requirements

A. Submit all submittals, questions, and work related documentation described in the ITS specifications to the Department.

B. The Department will respond to submittals with approval, comments that shall be addressed and require a re-submittal, and/or other direction to the Contractor.

942.1.04 Submittal Requirements

A. General Submittal

1. Submit to the Department for approval one electronic PDF of the submittals as specified herein.
2. All materials required for any pay item shall be contained in the submittal regardless of whether it was listed in the specifications.
3. Do not submit partial submittals. Partial submittals for any pay item will not be accepted.
4. Do not procure or install materials or components proposed on the Contract until material submittals or shop drawings are submitted for review and approved by the Department.
5. The Department will not be liable for any equipment or material purchased, work done, or delay incurred prior to the Department's approval of said equipment or material through the materials submittal data process.
6. The Department will approve or reject all submittals within three weeks of receipt of a complete package, unless otherwise specified or indicated by the Department.
7. Do not interpret approval of the submittals as approval of any deviation unless such deviation is identified in writing in the submittal cover letter.
8. Any failure of the Department to discover or note any unsatisfactory material will not relieve the Contractor of his responsibility for providing a complete operable ITS device installation as called for under the terms of the Contract.

B. Submittal Exceptions

1. Provide product and material information that meets the minimum submittal requirements listed in Table 2. This table is to be used as a guide and does not relieve the Contractor from submitting additional information to form a complete submittal package.
2. For products available on the Department's QPL, select prequalified materials. Consult the GDOT QPL web site to also obtain pre-approval procedures.
3. Submit a letter to the Department stating which QPL items will be used. Include product identification, including QPL number, brand name, type, and part number, for the Department to clearly identify that the construction item/product being proposed is on the QPL.

Table 2 – Submittal Requirements								
No.	**Submittal Requirement**	**Dynamic Message Signs (631)**	**Wireless System (926)**	**Fiber Optic System (935)**	**CCTV Camera (936)**	**Detection Systems (937)**	**Comm. and Electronic Equipment (939)**	**Submittal Due Date**
1	Materials Submittal Package Cover	√	√	√	√	√	√	14 calendar days after NTP
2	Equipment Catalog Cut-Sheets		√	√	√		√	60 calendar days after NTP and prior to installation
3	Pre-Testing/ Third-Party Test Results		√	√	√		√	60 calendar days after NTP and prior to installation
4	Quality Control Verification	√	√	√	√	√	√	60 calendar days after NTP and prior to installation
5	Shop Drawings and Mounting Details	√	√					90 calendar days after NTP and prior to installation
6	Structural Calculations	√						90 calendar days after NTP and prior to installation
7	Installation Plan with Schematic Drawings	√	√	√				30 calendar days prior to Installation
8	Operations and Maintenance Plan	√	√		√	√	√	30 calendar days prior to Installation
9	ITS Device User Manual	√	√		√	√	√	30 calendar days prior to Installation
10	Test Plan and Schedule	√	√	√				60 calendar days prior to any tests
11	Test Documentation	√	√	√	√			14 calendar days after completion of testing

Table 2 – Submittal Requirements								
No.	**Submittal Requirement**	**Dynamic Message Signs (631)**	**Wireless System (926)**	**Fiber Optic System (935)**	**CCTV Camera (936)**	**Detection Systems (937)**	**Comm. and Electronic Equipment (939)**	**Submittal Due Date**
12	Training Plan and Schedule	√	√	√				90 calendar days prior to training
13	As-Built Plans	√	√	√				30 calendar days after completion of installation and prior to burn-in
Specific Submittals								
14	Wireless System Survey Report		√					30 calendar days prior to installation
15	Fiber Optic Cable Installation Monitoring			√				30 calendar days prior to installation

√ = Submittal required

4. Not Applicable
5. The Department will ascertain that the construction item is the same material identified on the QPL and will acknowledge receipt of these items in the Project diary or as required by the construction manual.

C. Submittal

Submittal requirements are shown in Table 2 and categorized below as common submittal items or specific submittal items.

Common Submittal Items

1. Provide Materials Submittal Package Cover that meets the following requirements:
   a. Provide a materials submittal package cover that contains a complete list or index of materials being submitted as part of each pay item. Any data submitted without the cover or that is incomplete will be rejected.
   b. Submit the cover to the Department for review and approval prior to any submittals.
   c. Clearly identify in the submittals any deviations from the Contract requirements and specifications. Provide a detailed description of the deviation with the reason for the change. The Department reserves the right to reject any variation or change for any reason.
   d. Provide submittal data that is neat, legible, and orderly.
   e. Organize each package of submittal data by pay item and include materials and components that are required for a given pay item into a single package. It must be clear to the reviewer what exactly is being proposed and where the material will be used. If it is not clear what is being proposed, the submittal may be rejected by the Department.

f. Clearly denote on the cut-sheets what is specifically being proposed. If multiple models/part numbers are contained on a submitted cut-sheet or brochure, clearly denote (mark) on the cut-sheet/brochure which model/part number(s) is being proposed.

2. Provide warranty certification letter that meets the following requirements:

   a. Submit manufacturer or supplier warranty information for proposed ITS equipment, materials, and components.

   b. Submit warranty information on official company letterhead containing the following: subject line with title using the same terminology used in the specifications to clearly identify the item, description of the product, and signature by a person legally responsible to bind the company.

   c. Obtain warranty length and start time from the governing specification.

3. Provide catalog cut-sheets or manufacturer specification sheets for proposed ITS equipment, components, and materials that clearly provide, describe, and document the performance and other technical characteristics of the proposed item.

4. Not Applicable

5. Obtain pre-testing by a third-party or independent laboratory independent from the Department or the manufacturer that verifies and certifies that the manufacturer's product conforms to applicable specifications and requirements (i.e., NTCIP compliance, NEMA TS 4 environmental testing compliance, etc.).

6. Provide documentation on manufacturer/supplier letterhead with manufacturer signature verifying that the manufacturer's/supplier's quality management and control system is compliant with ISO 9001 or Six Sigma requirements.

7. Provide shop drawings and mounting details that meet the following requirements:

   a. Provide detailed drawings showing ITS device assembly and component layout as required in the specifications and recommended by the manufacturer to assemble or construct the item.

   b. Provide mounting details that clearly show the proposed mounting method, materials, and hardware being proposed for each ITS device.

8. Provide structural calculations prepared by a registered Professional Engineer, in the state of Georgia, that indicate that the ITS device assembly and mounting meets the requirements of these Supplemental Specifications, the Standard Specifications, and AASHTO for wind loading as applicable end required of the Contract.

9. Provide an Installation Plan with schematic drawings that meet the following requirements:

   a. Provide a document that clearly indicates the installation plan for the Project, including any staged deployment that is approved by the Department with construction methods and procedures for ITS and communications devices, components, infrastructure, sub-assemblies or assemblies, and materials.

   b. Include recommended manufacturer installation instructions and procedures in the installation plan.

10. Provide manufacturer operations and maintenance documentation that provides routine, emergency, and troubleshooting procedures for each ITS device installed.

11. Provide manufacturer ITS device user manual that describes how to operate the particular type of equipment, layout of controls, displays, and all other information required to correctly operate a fully functional unit.

12. Provide Test Plan and Schedule that meet the following requirements:

    a. Provide a test plan with procedures developed in conjunction with the manufacturer(s) for pre-installation tests, stand-alone tests, acceptance tests, and burn-in tests as specified herein.

    b. Complete and incorporate the specific ITS test forms and include as part of the test plan.

    c. Coordinate the development of the test plan and procedures with the ITS device manufacturer(s).

    d. Provide a written schedule for testing activities as specified herein.

    e. Provide test schedule updates as required or needed for the duration of the project.

13. Provide test report documentation that meet the following requirements:
    a. Provide test report documentation as specified herein including (1) ITS test documentation and (2) communications test documentation.
    b. Include test results data forms and calculated total loss budget (for fiber projects) as specified herein.
14. Provide Training Plan and Schedule that meet the following requirements:
    a. Provide a training plan including course content and course materials for each type of training session.
    b. Provide trainer's certification and qualifications.
    c. Provide a training schedule that outlines the time for the required training sessions and coordinates with the overall progress schedule.
    d. Provide each training participant with a copy of the course material. Include in course material copies of both a comprehensive manual and the presentation material that will be used.
    e. Provide two additional copies to the Department. Provide the classroom, audiovisual equipment, demonstration equipment, and "hands-on" equipment required.
15. Provide as-built plans for materials and installation work as specified in Section 942.3.01.C.4, along with structural elements and assemblies that are related to the ITS device or system at a given location as specified herein.

Specific Submittal Items

1. Provide wireless test report documentation and test results from the wireless system survey as specified in Section 926.3.01.B providing path analysis and local RF conditions, determination of local sources of interference, and RF field strength and fade margin.
2. Submit the method of monitoring fiber optic cable stress during installation to prevent cable damage from exceeding safe pulling tensions as specified in Section 935.3.01.
3. Not Applicable

942.2 Materials

Not Applicable

942.3 Construction

942.3.01 Construction Management Requirements

A. ITS Contractor Superintendent

1. Provide a competent ITS Contractor Superintendent on the project at all times work is in progress who shall have full responsibility for the prosecution of the work and act as a single point of contact in all matters on behalf of the Contractor.
2. Submit the name of the ITS Contractor Superintendent and a summary of the individual's relevant experience and qualifications to the Department for approval.
3. Do not change the ITS Contractor Superintendent without the prior written approval of the Department at its sole discretion.

B. Utility Coordination

1. Establish the electrical power service required for each ITS device as specified in the Contract.
2. Furnish or install equipment and materials that shall become part of the regional utility facility.
3. Coordinate such work with the utility representatives and furnish equipment and materials and perform work in accordance with the Contract documents and applicable utility agency standards and procedures.
4. Meet standards required by utility companies as related to the ITS equipment, materials, and installation associated with attachment to related power service feeds or leased communication connections.

5. Test the power utility service to confirm voltage levels and current capacity and the serviceability of any circuit connected to the ITS equipment.
6. Power utility representatives are not authorized to revoke, alter, or waive any requirements or design of materials or facilities provided under the specifications.
7. The inspection of any of the Contractor's work by the utility providers or the failure to inspect any of the Contractor's work by the utility provider representatives shall not relieve the Contractor of any requirements of the specifications.
8. Coordinate work with the utility providers to permit inspection of said work.
9. Notify the Department and the utility providers' representatives of planned work.

C. Project Documentation

1. Provide ITS Project Management Plan (PMP) that meet the following requirements for Department review:
   a. Submit within 14 calendar days following the issuance of the NTP or 30 calendar days prior to installation.
   b. Include the organization, authority, reporting relationships, and procedures to be implemented to manage and control the work.
2. Provide material submittals that meet the following requirements:
   a. Provide material submittals to the Department for review and approval prior to procurement and before work commences on the Project.
   b. Refer to Section 942.1.04 for the material submittal requirements.
3. Provide detailed as-built plans that meet the following minimum requirements:
   a. Submit as-built plans and drawings of ITS and communications work within 30 calendar days after completion of installation or as otherwise specified in the Contract documents.
   b. Prepare the as-built plans and show all changes and deviations from the original plans using electronic PDF, with markups shown in red text and lines.
   c. Submit a separate Microsoft Excel file with the GPS coordinates for each item with the as-built plans. The GPS coordinates shall be sub-meter or better positional accuracy.
   d. Include in the as-built plans all materials and installation work, along with all structural elements and assemblies that are related to the ITS device at a given location.
   e. Show final locations of new equipment and communications installed, including but not limited to, CCTV support poles, new utility poles, new field cabinets, DMS, and ESS support poles or structures.
   f. Provide the following information in regards to electrical service in the as-built plans:
      i. Address of the service pole
      ii. Power services from the meter base, including all cables from the service point.
      iii. The electric provider's name, the account number and the meter base information.
   g. Show routes and locations of the final cable installation.
   h. For aerial cable installations show pole locations, pole attachment heights, spans, co-locations, splice closure locations, maintenance/storage coils, and vertical risers on the plans. Make-ready worksheets shall also be provided for aerial fiber installations.
   i. For underground cable installations refer to Section 682 for additional as-built requirements.
   j. Provide the cable distance marking documentation required in Section 935.2.01.C.
   k. Include any other device-specific details that are required in the individual specifications.

D. Product Delivery, Handling, and Storage

1. Provide materials and components in protective packaging suitable for shipping and storage.
2. Label boxes with contents, including manufacturer name, model, serial numbers, and Project number.

3. Include shipping and handling fees in the Contractor's base price.
4. Be responsible for equipment, components, and materials prior to installation and final acceptance.
5. Take precautions to protect materials from the following: theft, vandalism/tampering, dents, scratches, dust, temperature, weather, cutting, paint, and other hazardous conditions.
6. Replace any damaged or lost material as required by the Department.

E. Tools and Equipment

1. Furnish equipment, tools, and superintendence for the completion of the work to be done in accordance with the Contract documents.
2. Equipment and tools mobilized for the work shall be in 100% working order prior to placing it in commission for the project.
3. Equipment and tool operators shall be trained and qualified before operating equipment on the Project.

942.3.02 General Maintenance and Warranty Requirements

A. Not Applicable

B. Maintenance Support Services

1. Provide ITS maintenance support services and assume responsibility of existing ITS devices, ITS communications, ITS devices, and ancillary equipment that is damaged by the Contractor, including labor, equipment, and materials associated with the repair or replacement of said materials and equipment from the first day of field impact continually until issuance of the MAL by the Department. Refer to Section 105.14 for requirements.
2. Provide maintenance support services during construction between construction initiation and the issuance of the MAL by the Department as follows:
   a. See Section 105.14 for requirements. The Department reserves the right to deduct the cost of maintenance activity from monies due or to become due the Contractor if the Contractor fails to remedy unsatisfactory maintenance within 48 hours after receipt of such notice.
   b. During the construction period, the Department's coordinator of maintenance or alternate will send a written problem notification of the issue.
   c. Provide a technical support phone line and the ability to provide replacement parts/material for both warranty and non-warranty repair.
   d. Provide full technical support, including material and labor, and consultation to the Department or a user that is responsible for maintenance for the period from the installation of the ITS devices in the Contract.
   e. Enter a precise description of repair work performed into the log book (supplied by the Department and located in the field cabinet and at the TMC or local agency control center facility).
   f. Identify clearly in writing the designated contact person and alternate for liaison with the Department. The Department will designate representatives and alternates as contact persons for the TMC and the field equipment and provide this information to the Contractor.
3. Provide maintenance support services during period following the issuance of the MAL and during the warranty period. The ITS equipment manufacturer(s) or the party designated by the manufacturer(s) shall be responsible for providing repairs or replacements for failed equipment as follows:
   a. During the warranty period, the Department's coordinator of maintenance or alternate will send problem notification to the manufacturer(s) or the party designated by the manufacturer(s).
   b. The manufacturer or designated party shall respond to the Department, the Department's designee, or maintaining agency within one business day of receiving the problem notification.
   c. As requested by the Department, the Department's designee, or maintaining agency, perform remote diagnostic tests and provide a technical support phone line to assist with troubleshooting and repair activity.
   d. Furnish replacements for any non-critical part or equipment found to be defective during the warranty period at no cost to the Department, the Department's designee, or maintaining agency within 10 business days of notification by the Department.

e. Provide firmware or software updates provided by the manufacturer associated with the system at no cost to the Department, the Department's designee, or maintaining agency during the warranty period.

f. Updates provided by the manufacturer or the party designated by the manufacturer shall not degrade the original functionality of the product warrantied.

C. General Warranty

1. Materials and equipment shall have a manufacturer's warranty (usual and customary) covering defects in assembly, fabrication, and materials. Warranty work shall include all activities required by the Contractor, manufacturer, or the party designated by the manufacturer including maintenance, removal, and replacement of parts and materials during the period of support.
2. Any material found to be in nonconformance shall be repaired or replaced without cost to the Department, the Department's designee, or maintaining agency for all incidentals to the repair or replacement of the product.
3. Provide the minimum warranty lengths for the ITS equipment and materials as specified in the respective ITS specifications.
4. Warranty periods shall begin on the date of issuance of the MAL or a partial MAL by the Department.
5. The manufacturers' warranties shall be continuous throughout the period and are fully transferable from the Contractor to the Department.
6. Provide maintenance support services and make any replacements required during the contract period and warranty period without additional charge for labor, equipment, parts, shipping, or other materials required.
7. Provide support for all system components notwithstanding any supplier's warranties whether written or implied.
8. Any software or firmware upgrades associated with the product shall be supplied to the Department at no cost during the warranty period.
9. Any firmware or software upgrades shall not degrade the original functionality of the product warranted.
10. For furnish only items (which also applies to GDOT purchases for the GDOT warehouse), the warranty shall begin upon material delivery.

942.3.03 Network Equipment Configuration and Integration Requirements

A. Network Equipment Configuration and Integration

1. Integrate all field devices, communications, and network systems installed during the project into the existing Cobb County Central Software system and form a complete, usable, and fully integrated system that can be controlled and operated from the TMC.
2. Perform and have responsible charge for steps, work, and activities in the configuration and integration procedures below except when Department responsibility is expressly indicated.
3. Maintain equipment and materials, while equipment is being configured by the Department, and including but not limited to operation, communications, power service, warranties, and technical support.
4. Coordinate all aspects of the procedure through the Department.
5. Perform all network equipment configuration steps for a complete project at one time.
6. At the Contractor's option for a staged equipment configuration progression, request in writing and provide a plan with schedule for the complete project that details the proposed stages and identifies network equipment and field sites for each stage. If the staging is approved by the Department, apply the requirements and conduct the procedure below independently and fully for each individual stage.
7. Make no requests regarding the initiation or conduct of the Network Equipment Configuration Procedure until material submittal reviews for network equipment, and related equipment, are successfully completed.

B. Network Equipment Configuration and Integration Procedures

1. Step 1: Request Network Addressing Information

a. Request the Department to provide in writing network addressing (IP, mask, and gateway) information for the network equipment in the Contract documents.

b. Submit the request for network addressing a minimum of 60 calendar days before the information is needed to maintain the Contract schedule.

c. If a staged equipment configuration is desired, identify that request at this time and submit the staging plan for approval.

2. **Step 2: Receipt of Network Addressing Information**

a. Once the Contractor's completed request is received by the Department, the Department will provide the network address information within the time frame referenced above.

b. The network address information will be provided in spreadsheet or document tabular form.

3. **Step 3: Complete Initial Installation**

a. Complete installation of field equipment, including but not limited to support poles, field cabinets, power service, field and network devices, and fiber communications infrastructure.

b. Complete equipment configuration.

c. Furnish network routing switch SFPs to the Department.

d. Furnish fiber patch cords needed in the hub building(s) but make no connections to the network routing switch.

e. Configure the network addressing information into the network equipment.

f. Provide network links that are active.

g. Provide in the same tabular form the equipment model and serial numbers for each network equipment device in its installed location.

4. **Step 4: Request Integration**

a. Request in writing for the Department to complete device configuration and systems integration of the network equipment in the Contract documents.

b. Submit the request for configuration/integration and the location/model/serial number information for each device to be configured a minimum of 60 calendar days before the configuration is needed to maintain the Contract schedule.

5. **Step 5: Complete Integration**

a. The Department will confirm network connectivity and addressing information in all devices prior to acceptance of the Contractor's request in Step 4.

b. Upon successful confirmation of network connectivity, the Department will have 60 calendar days to complete device configuration and systems integration of the network equipment in the Contract.

c. Continue with remaining field construction that has no impact on any equipment or communications infrastructure associated with the network configuration.

d. Any disruption of the equipment or communications infrastructure by the Contractor will result in resetting the 60-day period to allow the Department to complete the work related to modifying the device configuration and system integration.

6. **Step 6: Provide Integration Completion Acknowledgement**

a. The Department will notify the Contractor when network configuration is successfully completed, at which time the Network Equipment Configuration Procedure will be considered completed.

b. Continue with remaining Project activities, including the acceptance test.

942.3.04 Testing Requirements

A. Test Roles and Responsibilities

1. The Contractor shall be responsible for the following:

a. Installation, basic network device configuration, and testing new ITS devices and fiber communications.

b. Provide notice of testing and submit test results and as-built documentation to the Department.

c. Include notification and review periods, testing periods, and burn-in time in the overall progress (construction) schedule.

d. During the burn-in period:

i. Maintain all work under the Contract in accordance with the specifications.

ii. Restore any work or equipment to operating condition within one business day.

2. The Department will provide test support services including the following:

a. The Department will observe, provide testing oversight, review, accept, and reject tests.

b. During the burn-in period:

i. The Department will notify the Contractor upon failure or malfunction of equipment.

ii. In the event that the Contractor does not provide the services enumerated above under the Contract responsibilities, the Department or its authorized agents may, in the interest of public safety, take emergency action.

iii. The Department will deduct any costs from the monies due or to become due the Contractor under the Contract as a result of these emergency actions.

iv. Such action by the Department shall not void any guaranties or warranties or other obligations set forth in the Contract.

B. ITS Test Plan

1. Develop an ITS Test Plan, test procedures, and test schedule for conducting tests as specified herein and submit it to the Department for review and approval prior to the start of any test activity.

2. Include the following test categories: (1) pre-installation test, (2) stand-alone test, and (3) acceptance test. Refer to Section 942.3.04.C for minimum test requirements.

3. Request ITS test forms from the Department, which shall be used as a starting point for the ITS Test Plan development. The test requirements for ITS design elements unique to the Contract documents shall be reflected in the ITS Test Plan.

4. As part of the ITS Test Plan:

a. Submit a request in writing for a staged device or system installation progression and testing for groups of devices. Provide justification for the staged device or system installation, and a schedule for the complete project that details the proposed stages and identifies network equipment, ITS device(s), components, and field sites for each stage. The Department is not obligated to approve a staged device or system installation progression.

b. If device test staging is not approved by the Department, test all ITS devices and components of a similar type as a single group.

c. If device test staging is approved by the Department, the staged device or system installation shall apply to the payment milestones associated with the ITS Test Plan requirements and as specified herein independently and fully for each individual stage.

5. Testing shall demonstrate full compliance with the Contract documents.

6. Notify the Department a minimum of two weeks (14 calendar days) prior to the test date for each site.

7. The Department will be responsible for witnessing and signing off on testing.

8. Prior to performing local field testing with a Department, run through the local testing. If the site is not fully configured, functional, and ready for testing when the Department is there, reschedule the test date with the notification periods starting over.

9. Meet the following general ITS test plan requirements:

a. Test each device by confirming physical location, verifying orientation of devices, checking for physical access to the field cabinet, voltage testing, local communication connectivity testing, grounding, cable management, and device-specific function testing as described in the following subsections.

b. Demonstrate that furnished and installed hardware, cables, and connections operate correctly and that functions are in accordance with the requirements described in the specifications, manufacturer's recommendations, and this section.

c. Include items addressed in the specifications, manufacturer's recommendations, and this section.

d. Perform local communication connectivity testing to ensure communication between each device and the respective local field switch or wireless router, and a link to the nearest hub building Layer 3 network routing switch.

e. Complete power and communications installation as required by the Contract documents to schedule the acceptance of a site.

10. Develop ITS Test Plan that includes the following minimum procedure requirements:

a. A step-by-step outline of the test procedures and sequences to be followed demonstrating compliance with the testing requirements for all ITS devices and components.

b. A description of expected operation, output, and test results (pass/fail criteria).

c. An estimate of the test duration and proposed testing schedule.

d. A test results data form used to record data and quantitative results obtained during the tests.

e. A description of any special equipment, setup, test software, manpower, or conditions required for each respective test.

f. The number of test cases shall reflect the complexity of each ITS device or subsystem and the content of test cases covers all functionalities and requirements.

11. Provide test documentation that meet the following requirements:

a. Provide ITS test documentation for ITS device testing to the Department for review and approval.

b. Provide a report that is indexed and sorted and includes tabulated test data to the Department in 8.5 in by 11 in page size PDF for review.

12. Provide test equipment that meet the following requirements:

a. Provide test cables and equipment for ITS related tests including, but not be limited to:

i. Laptop with manufacturer test software with NTCIP, as applicable

ii. Patch cables and adapter cables

iii. Digital multi-meter and cable testers

b. Test equipment shall provide accuracy greater than that of the required parameters of the equipment being tested.

C. ITS Test

1. Provide and meet the following pre-installation test requirements:

a. Fiber Optic Reel Test (Section 935 only)

i. Prerequisite for testing: Submit and obtain approval for the fiber optic cable and components submittal package(s).

ii. Test description and requirements: Refer to Section 942.3.04.D.7 for fiber optic reel test description and requirements.

b. Not Applicable

2. Provide and meet the following stand-alone test requirements:

a. Field Site Test (Sections 631, 694, 926, 936, 937, and 939)

i. Prerequisite for testing: Approved ITS device and field cabinet submittal package(s).

ii. Test description and requirements:

a) Field Cabinets: Visually verify and inspect the installation of field cabinet, foundation, field cabinet interior components, electrical service, power supplies, ventilation fans, and lighting.

b) ITS device(s): Shall be visually field-verified and tested.

b. Local Operational Test (Sections 631, 694, 926, 936, 937, and 939)

i. Prerequisite for testing: Completed and approved field site test results.

ii. Test description and requirements: ITS device(s) shall be visually field-verified and tested. Any serial data terminal server or serial interface provided shall be tested as part of network testing.

c. Fiber Optic Post-Installation Test (Section 935 only)

i. Prerequisite for testing: Completed and approved fiber optic reel test results.

ii. Test description and requirements: Refer to Section 942.3.04.D.9 for fiber optic post-installation test requirements.

3. Provide and meet the following acceptance test requirements:

a. System Operational Test (Sections 631, 694, 926, 936, 937, and 939)

i. Prerequisite for testing: Completed and approved fiber optic post-installation test, field site test, local operational test, and network connectivity test results as specified herein.

ii. Test description and requirements: Demonstrate full central control, functionality, operations, and capabilities as follows:

a) Display of each CCTV camera image on workstations, video wall, or other CCTV software applications designated in the TMC.

b) Verify CCTV remote control functions and full PTZ functionality using GDOT Central Software.

c) Verify that CCTV video viewed at the TMC is of similar quality to the CCTV video approved as part of the stand-alone test.

d) Verify the operation of the auto iris feature.

e) Verify CLD operations according to manufacturer recommendations.

f) Verify that DMS messages displayed are unobstructed, clear, readable, and without distortions.

g) Verify DMS messages are clearly visible under all lighting conditions.

h) Verify DMS remote control functions, including the device status, brightness adjustments, and display of messages, graphics, logos, and test patterns using GDOT Central Software.

i) Verify ESS data are calibrated and accurately collected and presented to a central ESS data server.

j) Verify VDS data are accurately collected and presented in GDOT Central Software, and monitor detector devices.

k) Verify full integration of other ITS devices installed on the Project into GDOT Central Software, including the verification of control and monitoring capabilities with the GDOT Central Software and configuration parameters.

l) Verify remote monitoring and control of field devices, including network switches, UPS, and remote field power controllers.

b. Burn-in Test (Sections 631, 926, 936, 937, and 939)

i. Prerequisite for testing: Completed and approved system operational test results and approved as-built plans.

ii. Test description and requirements:

a) Demonstrate through burn-in of day-to-day full operations of the system from the TMC that all requirements defined in the Contract documents and the specifications, including, but not limited to, functional/system performance requirements, electrical requirements, data communication

requirements, environmental requirements, documentation, and interface requirements with other components of the system are fully satisfied.

b) Repair or replace any system failure or failed ITS device during any portion of the burn-in test without disrupting the system's operation. After repairing the equipment the Department will determine that it functions properly.

c) All costs associated with the maintenance, repair, or replacement of the ITS devices shall be the responsibility of the Contractor between the time the Contractor initiates actual work and the issuance of the MAL from the Department.

d) The duration of the burn-in test will be maintained by the Department as follows:

1) The test period shall be a minimum of 30 calendar days, which may be consecutive calendar days or non-consecutive calendar days. The test duration may be extended based on the issues or failures experienced during the test.

2) The test period shall be paused in the event of a device or system failure, and restarted upon correction of the failure(s).

3) Successful completion will be granted on the 30th day of the test period if no failures occur.

4) If equipment failure occurs during the 1st through 15th day, then the final acceptance will be withheld until all the equipment is functioning properly for 30 consecutive calendar days after repair.

5) If equipment failure occurs during the 16th through 30th day, final acceptance will be withheld until all the equipment is functioning properly for 15 consecutive calendar days after repair.

6) If a specific piece of equipment has malfunctioned more than three times during the test period, replace the equipment with a new unit and continue the test period for an additional 30 calendar days.

e) If any spare field-replaceable ITS devices supplied under the Project are used to replace failed ITS devices during the burn-in test, replace the required spare ITS device inventory with new unused spare ITS devices before final acceptance.

f) Upon successful completion of the overall burn-in test, the entire Project will be eligible for maintenance acceptance and final inspection and acceptance as described in Section 942.3.04.G.

g) The Department will determine burn-in period acceptance after satisfactory completion of the required burn-in period and on the basis of a comprehensive field inspection of the complete system in accordance with the specifications.

h) Upon burn-in period acceptance but prior to final acceptance of the entire Contract, maintain the system in accordance with Section 105.14.

D. Communications System Test Plan

1. Develop a Communications System Test Plan and test schedule for conducting tests as specified herein and submit it to the Department for review and approval prior to the start of any test activity.

2. Include the following test categories in the Communications System Test Plan: (1) fiber optic communications system test and (2) wireless system communications test. Refer to Sections 942.3.04.E and F for minimum test requirements.

3. Meet the following communications test documentation requirements:

   a. Provide communications test documentation for all communications (fiber or wireless) testing to the Department for review and approval.

   b. Provide a report that is indexed, sorted, and includes tabulated test data to the Department in 8.5 in by 11 in page size PDF for review.

4. Meet the following communications test equipment requirements:

   a. Provide and submit test equipment to the Department for review and approval.

b. Test equipment shall provide accuracy greater than that of the required parameters of the equipment being tested.

c. Meet the following minimum fiber optic test equipment requirements:

i. Provide the test cables and equipment for fiber optic related tests.

ii. Perform OTDR and optical source/power meter testing, as indicated herein. Submit test cables and devices to the Department for review and approval prior to conducting the tests.

iii. Provide evidence that the OTDR and other test equipment to be used have been calibrated prior to testing.

iv. OTDR and optical source/power meter testing technicians shall be certified and approved by the test equipment manufacturer. Provide proof of certification to the Department.

v. OTDR devices shall include storage of fiber optic cable signatures. Transfer signatures of cables tested to a CD and provide to the Department.

vi. Use a factory launch cable ("fiber launch box") to address dead zone issues. Indicate the length of the launch cable in test reports.

vii. Provide manufacturer recommended OTDR modules as required or necessary for long distance fiber testing.

viii. Set the pulse width setting of the OTDR to the lowest possible setting while allowing the full length of fiber optic cable to be measured for faults or reflective events.

d. Provide test cables and equipment for wireless system-related tests including, but not be limited to:

i. Wireless spectrum analyzer

ii. Laptop with test software

iii. Cable and antenna testers including VSWR meters

E. Fiber Optic Communications Test (Section 935 only)

1. Provide fiber optic communications test plan that meet the following requirements:

a. Develop and submit to the Department within 30 calendar days prior to any tests, a Fiber Optic Test Plan for review and approval, that details testing for new fiber optic cables and components, the manufacturer's recommended test procedures, and industry standard practices.

b. Include procedures and test result data forms for the Department's review and approval prior to the day the tests are to begin. Include the sequence in which the tests will be conducted in the Test Plan.

c. Include testing covered in this section to demonstrate that the fiber is meeting the design intent and requirements.

d. Develop test result data forms for documenting the test results.

2. Provide fiber optic test equipment that meet the following requirements:

a. Provide the test cables and devices for the fiber optic related tests.

b. Perform OTDR and optical source/power meter testing as indicated herein. Submit test cables and devices to the Department for review and approval prior to conducting the tests.

c. OTDR and optical source/power meter testing technicians shall be certified and approved by the test equipment manufacturer. Provide proof of certification to the Department.

d. OTDR devices shall include storage of fiber optic cable signatures. Transfer signatures of cables tested to a CD and provide to the Department.

e. Use a factory launch cable ("fiber launch box") to address dead zone issues. Indicate the length of the launch cable in test reports.

f. Set the pulse width setting of the OTDR to the lowest possible setting while allowing the full length of fiber optic cable to be measured for faults or reflective events.

3. Provide fiber optic pre-test procedures that meet the following requirements:
   a. Turn on OTDR and optical source/power meters and allow them to warm up for a minimum of 10 minutes prior to test setup and testing. Allow testing devices to warm up every time the testing devices are cycled from off to on.
   b. Clean launch cord and test cable connectors prior to setup and testing. Clean launch cord and test cable connectors every time they are disconnected and reconnected to test devices. Clean launch cord and test cable connectors every time they are disconnected and reconnected to field installed connectors.
   c. Clean field installed cable connectors prior to testing. When a test connector has been disconnected, clean the field connector prior to the field connector being reconnected.
4. Provide manufacturer test and certification that meet the following requirements:
   a. Each reel of fiber optic cable shall be delivered to the Project site accompanied by the manufacturer's test data. The manufacturer's test data shall identify the factory-tested attenuation, in decibel per kilometer, of fiber optic cable strands for each furnished fiber optic cable type at the wavelengths shown in Table 3. The manufacturer's maximum attenuation test values shall be met or better the attenuation requirements as specified herein.

Table 3 – Fiber Optic Cable Wavelengths	
Fiber Type	**Test Wavelengths**
Single-mode	1,310 nm and 1,550 nm

   b. Include the following manufacturer test data as a minimum:
      i. Name of manufacturer
      ii. Cable product number
      iii. Cable mode
      iv. Cable type
      v. Manufacturer tested cable length
      vi. Cable ID and fiber ID including:
      vii. Cable binder, tube, and strand colors
      viii. Fiber strand number
      ix. Measured maximum attenuation results
5. Provide fiber optic reel test that meet the following requirements:
   a. At the direction of the Department, test the fiber optic cable at the site storage area prior to installation.
   b. Perform visual inspections and testing on each fiber optic cable delivered to the job site prior to any de-spooling or installation of the fiber optic cable. Notify the Department of any visual abrasions, cuts, defects, or other observed physical abnormalities.
   c. Include the following pre-installation testing criteria as a minimum:
      i. Randomly test three fiber optical fiber strands from each buffer tube for each furnished fiber optic cable type at the wavelengths shown in Table 3 with a compatible OTDR.
      ii. Test for continuity, length, anomalies, and approximate attenuation.
      iii. If the tested loss per kilometer exceeds the loss from the manufacturer's test data, the Department will reject the cable.
   d. Include the following pre-installation testing data as a minimum:
      i. Name of testing company

ii. Name/ID of testing technician

iii. Date and time of testing

iv. Name and model of testing device

v. Shipped cable length

vi. Cable ID and fiber ID including:

a) Cable binder, tube, and strand colors

b) Fiber strand numbers

vii. Measured approximate attenuation results

viii. Measured fiber strand lengths

6. Provide splice test results that meet the following requirements:

a. Record splice loss measurement test results from fusion splices and submit to the Department in an electronic format for evaluation.

b. Include the following splice testing data as a minimum:

i. Name of splicing company

ii. Name/ID of splicing technician

iii. Date and time of splicing

iv. Name and model of testing device

v. GPS location data for each fiber optic splice

vi. Cable ID and fiber ID including:

a) Cable binder, tube, and strand colors

b) Fiber strand numbers

vii. Measured splice loss values

7. Provide fiber optic post-installation test that meet the following requirements:

a. The Department reserves the right to conduct tests on their own.

b. Test all installed optical fibers bi-directionally using both an OTDR and optical source/power meter.

c. Provide OTDR test that meets the following requirements:

i. Perform a full bi-directional test (using bi-directional averaging) on spliced and terminated fibers in each cable using an OTDR. Test fibers for each furnished fiber optic cable type at the wavelengths shown in Table 3 for:

a) Length

b) Continuity

c) Individual cable, connector, and splice losses

d) Combined cable, connector, splice loss

e) Reflective characteristics

ii. The connection between the OTDR and each tested fiber shall be factory assembled patch cables, or launch cables equal to a length of 150% of the dead zone as published by the OTDR manufacturer. The launch cable shall have the appropriate connectors to allow for connection to the terminated fiber port without the use of additional couplers.

iii. Provide and meet OTDR test and acceptance criteria as follows:

a) Test for end-to-end attenuation of SM optical fibers at the wavelengths shown in Table 3. Inspect the subsequent traces for end-to-end attenuation and ensure the average loss (in dB/km) does not exceed the loss criteria specified in Sections 935. 2.01.B.7.a and 935.2.01.B.7.b.

b) Test for end-to-end attenuation of MM optical fibers at the wavelengths shown in Table 3. Inspect the subsequent traces for end-to-end attenuation and ensure the average loss (in dB/km) does not exceed the loss criteria specified in Sections 935.2.01.B.7.c and 935.2.01.B.7.d.

c) The measured combined segment end-to-end losses consisting of optical fiber losses, connector losses, and splice losses shall not exceed the calculated loss of total loss budget as specified herein.

d) Demonstrate performance as shown in Table 4.

Table 4 – OTDR Test and Acceptance Criteria

Test Parameter	Splice New SM Cable to New SM Cable	Splice New SM Cable to Legacy SM Cable and for new MM to new MM cable	Single Connector	Mated Connector Pairs	End-to-end Segment
Splice Loss Test	≤0.1 dB, bi-directional averaged	≤0.3 dB, bi-directional averaged	N/A	N/A	N/A
Connector Insertion Loss Test	N/A	N/A	≤0.4 dB	≤0.8 dB	N/A
Combined Total End-to-end Segment Loss Test	N/A	N/A	N/A	N/A	Measured Segment Loss < Calculated Total Segment Loss Budget

iv. Include the following OTDR test data at a minimum:

a) Name of testing company

b) Name/ID of testing technician

c) Date and time of testing

d) Name and model of testing device

e) OTDR test parameters used for testing: test wavelength, refractory index, test pulse width, test range, acquisition time, and scale

f) Starting and ending test points/locations

g) Cable ID and fiber ID including:

1) Cable binder, tube, and strand colors

2) Fiber strand numbers

h) Individual measured attenuation loss values

i) Combined measured attenuation loss values

j) Measured fiber segment/link length

v. Cable trace window shall be limited to the length of the tested fiber segment plus 25%.

d. Provide and meet the following optical source/power meter test requirements:

i. Perform a full bi-directional attenuation test on optical fiber segments using an optical source/power meter. Test optical fiber segments for each furnished fiber optic cable type at the wavelengths shown in Table 3 for the combined loss of optical fiber, connectors, and splices.

ii. The measured segment loss of optical fiber, connectors, and splices shall not exceed the calculated loss of total loss budget.

iii. Include the following optical source/power meter test data as a minimum:

a) Name of testing company

b) Name/ID of testing technician

c) Date and time of testing

d) Name and model of testing device

e) Starting and ending test points/locations

f) Cable ID and fiber ID including:

1) Cable binder, tube, and strand colors

2) Fiber strand number

g) Measured attenuation loss values

8. Provide loss budget calculation and documentation that meet the following requirements:

a. Calculate the total loss budget of the system according to the following calculations, and compare the actual loss in each segment of the system to the calculated budget.

b. Submit the results for each segment of fiber optic cable in tabular format reporting if the total loss is within the limits of the specifications by noting “pass” or “fail” for each segment of fiber. A segment of fiber is defined as one that terminates at each end.

c. Use the following calculations to determine the total loss budget for each segment:

i. Splice loss budget = number of splices x 0.1 dB/splice

ii. Connector loss budget = number of connectors x 0.4 dB/connector

iii. Length loss budget = length of fiber optic cable (measured by OTDR) x manufacturer tested cable attenuation (dB/km) for each furnished fiber optic cable type and segment at the wavelengths shown in Table 3. Where no manufacturer cable attenuation data are provided or no existing cable attenuation data exist, calculate the length loss budget using industry standard cable attenuation values of 0.35 dB/km at 1,310 nm wavelength and 0.25 dB/km at 1,550 nm wavelength for SM and

iv. dB/km at 850 nm wavelength and 1.0 dB/km at 1,300 nm wavelength for MM.

v. Total loss budget = splice loss budget + connector loss budget + length loss budget.

d. Provide total budget calculation equations on test form(s) to be submitted as part of the test report documentation.

e. Provide threshold calculations described above along with measured test results.

9. Provide supplementary fiber optic test documentation that meets the following requirements:

a. Include fiber loss budgets of each fiber segment tested.

b. Include installed cable lengths of each fiber segment tested.

c. Include number of connectors in each tested fiber segment.

d. Include number of splice in each tested fiber segment.

10. Provide fiber optic acceptance procedure that meet the following requirements:
    a. At the completion of pre- and post-installation fiber optic testing, provide documentation of the test results to the Department for review and approval as follows:
        i. Supply OTDR traces/signatures meeting Telcordia GR-196-CORE data format requirements for fiber optic cables installed on the Project.
        ii. Submit fiber optic test documentation in hard copy and electronic format as indicated herein and as approved by the Department.
        iii. Provide the OTDR data analysis software, as necessary or required, with any license required to the Department for their review and analysis of stored test results.
    b. Submit test results, including results of failed test and re-tests, to the Department.
    c. The test result data forms shall contain all of the data taken and quantitative results for all tests. The test result data forms shall be signed by an authorized representative (company official) of the Contractor.
    d. Submit at least one copy of the test result data forms to the Department within 10 calendar days of the test's conclusion.
    e. Compare the results of each test with the requirements specified herein. Failure to conform to the requirements of any test will be counted as a defect, and the cable or component will be subject to rejection by the Department.
    f. Retest rejected cable or components, provided that all non-compliances have been replaced or repaired, retested, and evidence thereof submitted to the Department.
    g. Any delays in performing these tests may result in the Contractor paying the additional costs of providing the Department's representatives for the additional testing time.
    h. If any event is detected above the allowable loss value, replace or repair that event point.
    i. If the total loss exceeds these technical requirements, replace or repair that cable run at the Contractor's expense, to include both labor and materials.
    j. Provide indexed, sorted, and tabulated fiber optic test data to the Department in 8.5 in by 11 in page size PDF for review.

F. Wireless System Communications Test (Section 926 only)

1. Provide wireless Ethernet radio testing that meets the following requirements:
    a. Furnish test equipment required to install and test the wireless system in accordance with the parameters specified. Unless otherwise stated, the test equipment will not be considered part of the wireless system.
    b. Submit a system pre-test test plan for approval.
    c. Conduct the following system pre-testing:
        i. Calculate a link budget using the proposed radio equipment specifications, required bandwidth, receiver sensitivity signal level, and fade margin thresholds for the entire wireless link.
        ii. Verify system integrity through built-in wireless equipment diagnostics or through external test equipment.
        iii. Test each of the parameters in the system to verify that the installation was successful.
        iv. Include the proposed radio equipment specifications to calculate the actual bandwidth, signal level, fade margin, and reliability between each end of the system.
        v. Provide the calculated and measured values in a single table to the Department for acceptance.
        vi. Measured values shall be within 10% of the calculated values. This will be considered the system pre-test.
    d. Submit a final test plan a minimum of 30 calendar days prior to final Project completion to the Department for approval.
    e. At a minimum, include the following items in the system acceptance test:

i. All items performed in the approved pre-test.

ii. Perform the following performance testing:

a) Verify 10/100Base-T/TX interfaces and operations.

b) Conduct bi-directional packet error test that demonstrates zero errors for duration of five minutes at full bandwidth.

c) Conduct throughput test to demonstrate that maximum data rate or each point to point, point to multipoint, or repeater site (if needed) can be supported.

2. Conduct the following additional device testing, as applicable:

a. Verify H.264 video unicast performance over the network is of similar quality to the CCTV video approved as part of the CCTV camera stand-alone test.

b. Verify control data channel performance using PTZ control commands.

c. Verify and demonstrate user programmable parameters and functions.

d. Verify and demonstrate remote configuration using the CCTV camera web graphical user interface.

G. Final Inspection and Acceptance

Add to GDOT Standard Specifications Section 105.16 as follows:

1. Notification of substantial completion will be defined by the Department for the Project as 100% of the infrastructure and ITS devices and components have been furnished, installed, configured, integrated, and tested. When substantial completion has been met for the Project as determined by the Department, conduct final inspection and close-out activities.

2. Provide final inspection and project close-out that meet the following requirements:

a. Conduct final inspection and close-out after successfully completing the burn-in test and providing written notification of substantial completion and receiving Department approval.

b. The final inspection and close-out activities include but are not limited to:

i. Demonstrate the overall system is fully operational.

ii. Verify ITS devices and components are in their correct final configuration.

iii. Verify submittals including test reports are submitted and approved by the Department.

iv. Verify final punch list items are completed.

v. Verify final cleanup requirements are completed and the field conditions are restored to their original condition

vi. Verify final cleanup requirements are completed and the field conditions are restored to their original condition.

vii. Obtain approval of final as-built plans.

viii. Deliver spare parts and materials.

ix. Complete all training services.

x. Transfer all warranties to the Department.

c. Request in writing the Department's approval to start the final inspection a minimum of 14 calendar days prior to the requested start date. The Department reserves the right to reschedule the start date if needed. The start date for the final inspection cannot be prior to the successful completion of the overall burn-in test.

d. Upon unsuccessful or incomplete final inspection, make the necessary corrections and conduct a new final inspection. Allow the Department up to 14 calendar days to conduct a final inspection.

e. The Department reserves the right to require, at no additional expense to the Department, the attendance of a qualified technical representative of the equipment or software manufacturers to attend a portion of a final inspection.

3. As part of the ITS Test Plan, request in writing for a staged device or subsystem installation progression and testing for groups of devices.
   a. Provide justification for the staged device or subsystem installation, and a schedule for the complete project that details the proposed stages and identifies network equipment, ITS device(s), components, and field sites for each stage.
   b. If the staging is approved by the Department, the staged device or subsystem installation will apply to the payment milestones associated with the ITS Test Plan requirements and as specified herein independently and fully for each individual stage.
   c. During the burn-in test, the default test condition is that all ITS devices and components shall be tested simultaneously unless a staged plan is approved by the Department.

H. Surge Protection Devices

1. Protect all copper wiring and cabling entering the field cabinet.
2. Use a minimum of No. 16 AWG grounding for each surge protection devices, or larger if recommended by the surge protection device manufacturer.
3. Use insulated green wire and connect the ground wire directly to the ground buss bar.
4. Do not “daisy chain” the grounding wires of other devices, including other surge protection devices.
5. Label all surge protection devices with silk-screened lettering on the mounting panel.
6. Furnish and install all necessary transient surge protection device to protect field cabinet equipment.

I. Grounding

1. Ground the field cabinet, controller, poles, pull boxes, and conduit to reduce extraneous voltage to protect personnel or equipment.
2. Install grounding electrodes of size, length and material specified in Section 682.
3. Test electrodes according to Section 682. Report final test results.
4. Provide permanent and continuous grounding circuits with a current-carrying capacity high enough and an impedance low enough to limit the potential above the ground to a safe level.
5. Ground any pole-mounted equipment to the pole.
6. Use the shortest possible ground lead to the grounding source.
7. All components, including mounting hardware, shall be grounded and bonded per manufacturer’s recommendations and NEC. Dress and route grounding wires separately from all other controller cabinet assembly wiring.
8. Grounding Electrodes
   i. Install grounding electrodes adjacent to the traffic signal pole bases, preformed field cabinet bases, and in pull boxes to protect the grounding system.
   ii. Grounding electrode stacking may be permitted in areas where ground conditions allow. The contractor shall coordinate with the Construction Manager or designee to have a Department representative observe stacked electrode installation.
9. Field Cabinet
   i. Install a minimum of 3 grounding electrodes for each field cabinet.
   ii. Connect the power company neutral, conduit ground, and grounds of equipment housed in the field cabinet to the buss-bar.
   iii. Use a No. 6 AWG solid copper wire bonded between the buss and grounding electrode.
   iv. Connect neutral conductors to the field cabinet buss-bar and ground them at each terminal point.
   v. Ground the field cabinet with a No. 6 AWG solid copper wire between the buss-bar to the grounding electrodes. Bends shall not exceed 4 in (100 mm) radius.

vi. Join the grounding electrodes and connect them to the grounding buss of the field cabinet with No. 6 AWG solid copper wire.

942.3.05 Training Requirements

1. Provide personnel trained by the equipment manufacturers and authorized by said manufacturer to perform the training unless otherwise specified.
2. Provide on-site manufacturer personnel to support the training sessions of the proposed device/system equipment and software.
3. Provide documentation of the trainer's certification and experience as part of the submittal process.
4. Conduct training prior to final ITS acceptance.
5. Provide supplies, equipment, materials, handouts, operations and maintenance manuals, test equipment and tools, travel, and subsistence necessary to conduct the training.
6. Record all portions of all training sessions using the latest audio and video technology. All audio and video recordings shall become the property of the Department at the end of each course given.
7. Conduct training in half-day sessions. Two half-day sessions may be held on the same day, at the discretion of the Department.
8. Provide training for up to 12 people for each session. Limit in-shop and in-field training to group sizes of five people at a time. Training facility space for class-room type training sessions will be made available by the Department.
9. Provide an agenda/course outline for each training session as part of the submittal process.
10. Provide actual hands-on training of the equipment or software for each trainee depending on the training session type and topic.
11. Provide course content (as applicable depending on the type of training session) to include at a minimum:
    a. Description of the theory of installed equipment and software
    b. Discussion of operations of equipment and software including walk-through of features and capabilities
    c. Installation, setup, configuration and programming, device and user addition, and administration
    d. Explanation and measurement of signal levels, quality, and any encoding
    e. Discussion of diagnostics, troubleshooting, maintenance, performance tuning, and monitoring
    f. Discussion of warranty and maintenance, warranty process, and any annual maintenance support services
12. If, at any time during a training course, the Department or its designee determines that the course is not being presented in an effective manner, the training for the course will be suspended. Make the necessary changes to the course, resubmit the required training materials to the Department for approval, and reschedule the training course to be conducted prior to the final ITS acceptance.

942.4 Measurement

The equipment configuration and integration services, in place, and accepted will be measured as follows:

A. Network Equipment Configuration and Integration

The network equipment configuration and integration will be measured for payment by determining the percentage complete of the total number of unique devices in the Contract documents that are added to the GDOT Central Software or other central software as required by the Contract documents.

942.5 Payment

The Department will pay 100% of the total Contract bid amount upon issuance of the MAL for all devices in the system that require network equipment configuration and integration.

If the Department approves a staged device or system installation progression, then a partial payment will be paid for upon issuance of the MAL, based on the percentage complete of the total number of devices that require network equipment configuration and integration for which the partial MAL was issued.

Payment will be full compensation and include network equipment configuration and integration for all ITS devices and subsystems, labor, tools, test equipment, and incidentals necessary to complete the work. The total sum of all payments cannot exceed the original Contract amount for this item.

Payment Notes:

Submittal

Submittal requirements will not be paid for separately. It will be considered incidental to the individual ITS device or subsystem pay item.

Testing

Testing will not be paid for separately. It will be considered incidental to the individual ITS device or subsystem pay item.

Payment for equipment configuration and integration services will be made under:

Item No. 942	Network Equipment Configuration and Integration	Lump sum